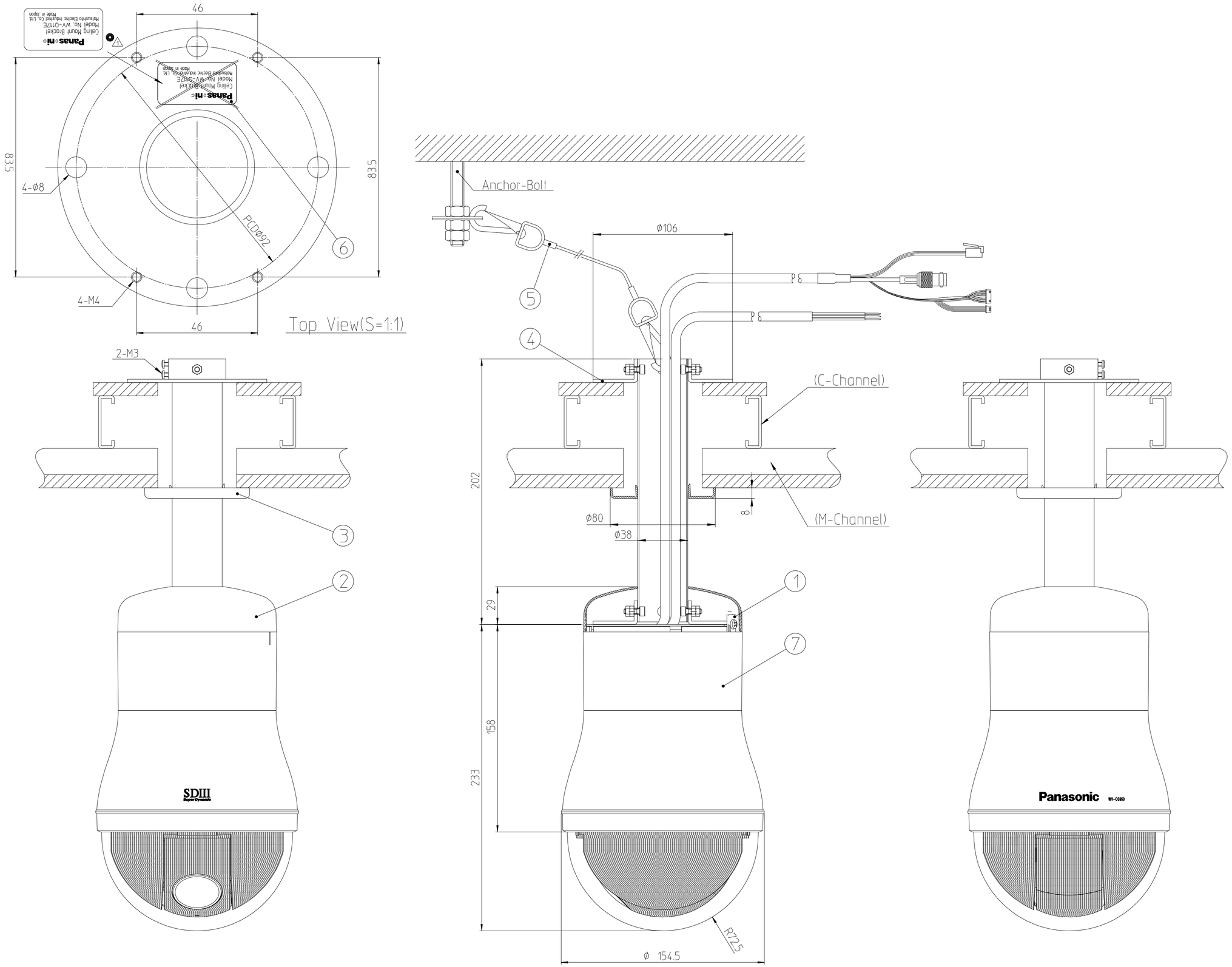

46
83.5
83.5
4-Ø8
PCDØ92
4-M4
46
Top View(S=1:1)
Anchor-Bolt
Ø106
(C-Channel)
(M-Channel)
Ø80
Ø38
8
202
29
158
233
R72.5
Ø 154.5
2-M3
SDIII
Panasonic