50-inch Touch Screen LCD Display with Ceiling Bracket

06-April-2016

Unit : mm [inches]

TH-50BF1+TY-CE42PS20

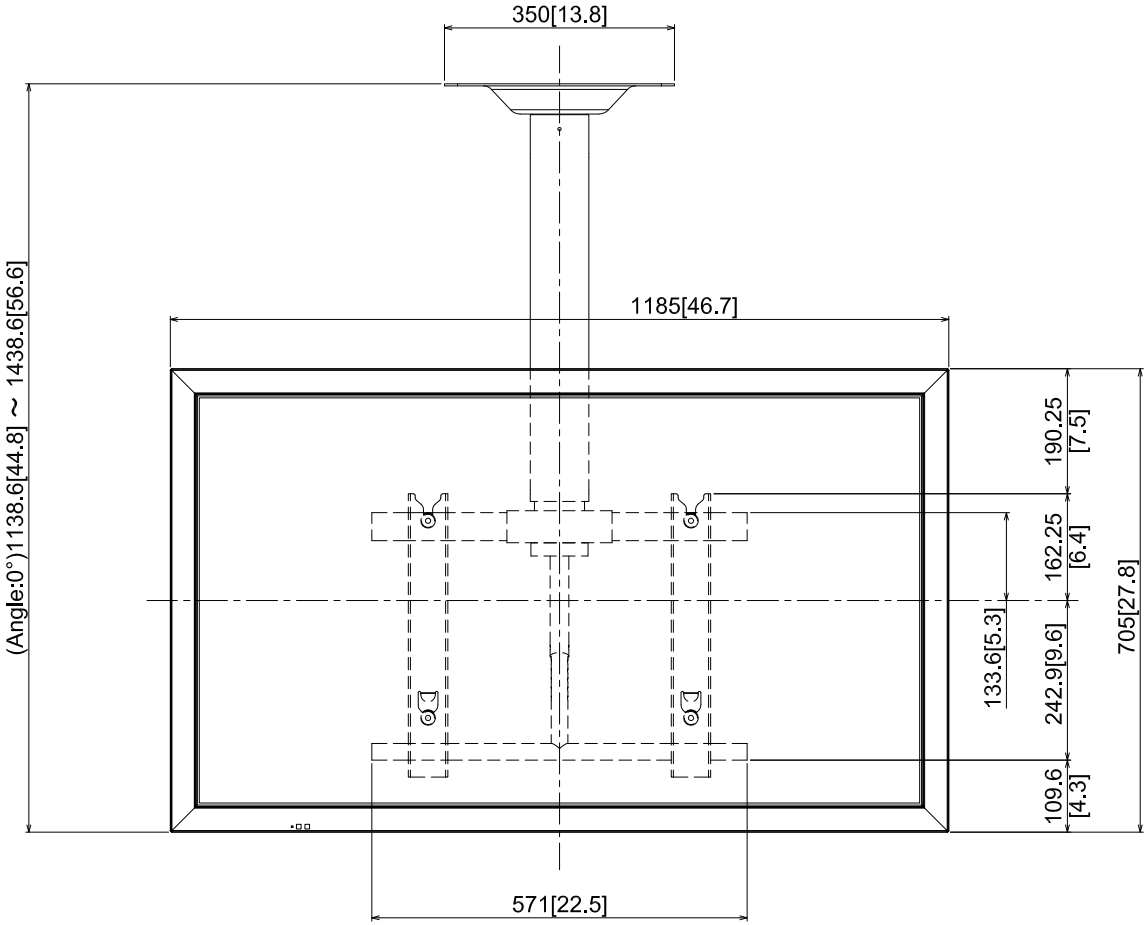

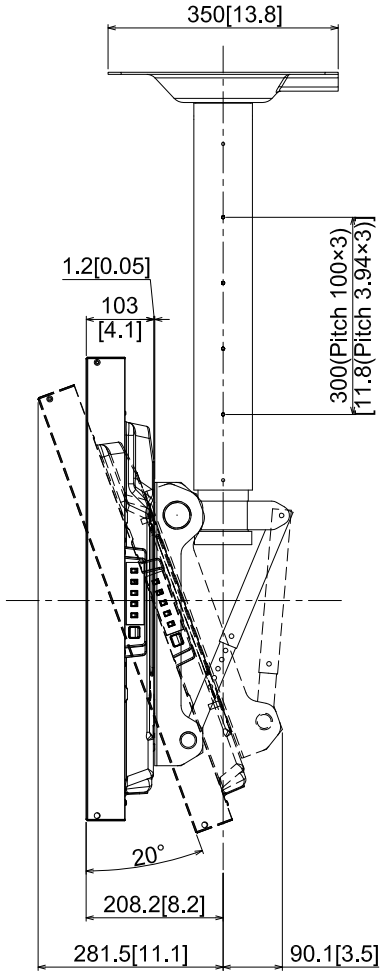

Design and specification subject to change without notice.

© Panasonic Corporation 2016