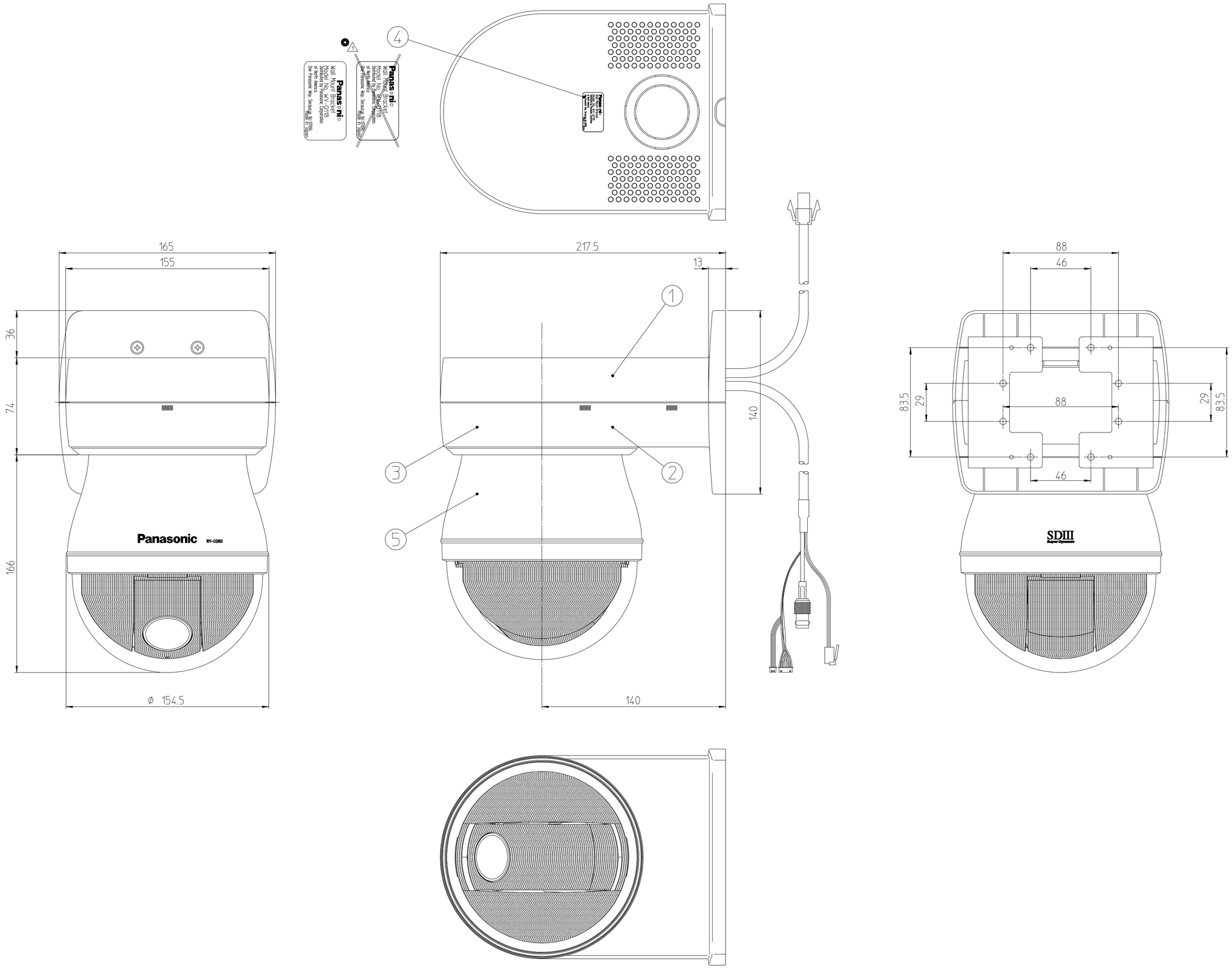

4
1
Panasonic
Wall Mount Bracket
Model No. WV-CS118
Distributed by Panasonic Corporation
of North America
One Panasonic Way, Secaucus, NJ 07094
Made in Japan
165
155
36
74
166
Panasonic
WV-CS960
ø 154.5
217.5
13
1
2
3
5
140
140
88
46
83.5
29
88
29
83.5
46
SDIII
Super Dynamic