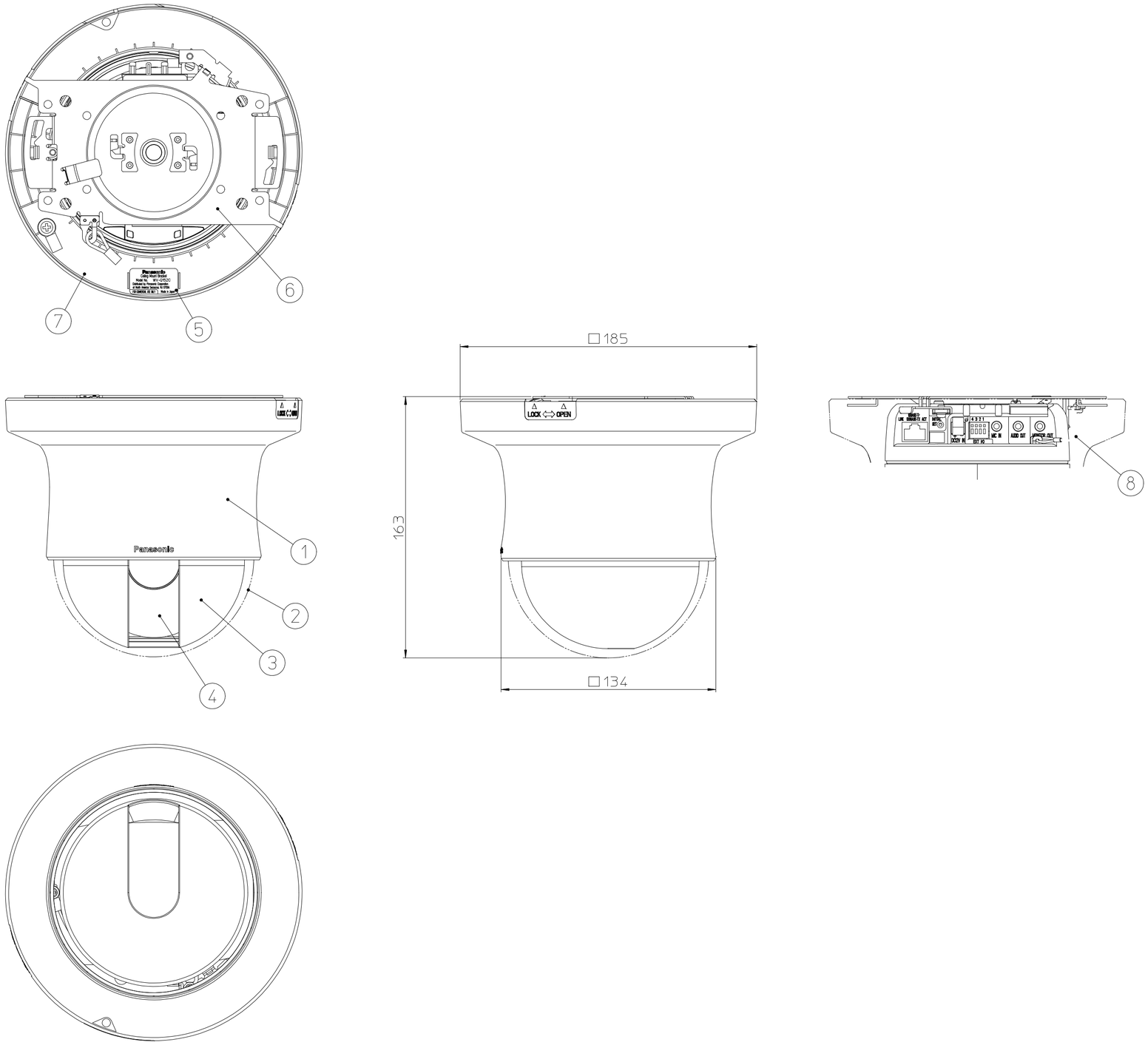

6
7
5
□185
LOCK OPEN
163
□134
8
Panasonic
1
2
3
4