Panasonic®

Important Information

Network Camera

Model No. WV-S2550L

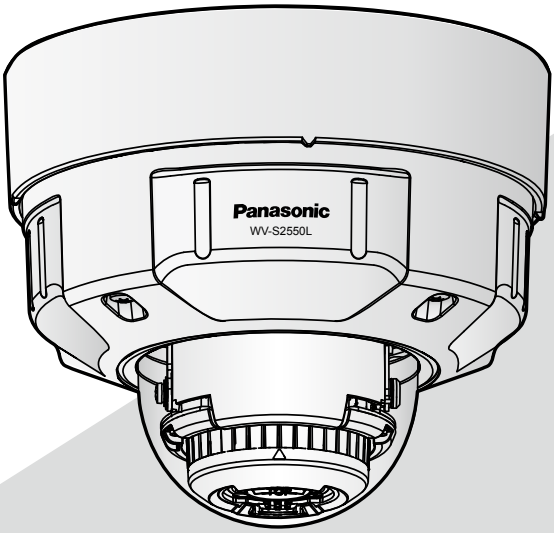

* For information about the installation tasks, refer to the provided Installation Guide. For information about how to perform the settings and how to operate the camera, refer to the Operating Instructions on the following Panasonic support web site.
https://security.panasonic.com/download/

Before attempting to connect or operate this product,
please read these instructions carefully and save this manual for future use.

The model number is abbreviated in some descriptions in this manual.

Contents

Limitation of liability 3
Disclaimer of warranty 3
Preface 4
Main functions 4
About the user manuals 6
System requirements for a PC 6
Trademarks and registered trademarks 7
Copyright 7
Open Source Software 8
Network security 8
Precautions 9
Precautions for installation 13
Parts and functions 15
Insert/remove an SD memory card* 22
Troubleshooting 24
Specifications 26
Optional accessories 31

* SDXC/SDHC/SD memory card is described as SD memory card.

Limitation of liability

THIS PUBLICATION IS PROVIDED “AS IS” WITHOUT WARRANTY OF ANY KIND, EITHER EXPRESS OR IMPLIED, INCLUDING BUT NOT LIMITED TO, THE IMPLIED WARRANTIES OF MERCHANTABILITY, FITNESS FOR ANY PARTICULAR PURPOSE, OR NON-INFRINGEMENT OF THE THIRD PARTY'S RIGHT.
THIS PUBLICATION COULD INCLUDE TECHNICAL INACCURACIES OR TYPOGRAPHICAL ERRORS. CHANGES ARE ADDED TO THE INFORMATION HEREIN, AT ANY TIME, FOR THE IMPROVEMENTS OF THIS PUBLICATION AND/OR THE CORRESPONDING PRODUCT (S).

Disclaimer of warranty

IN NO EVENT SHALL Panasonic Corporation BE LIABLE TO ANY PARTY OR ANY PERSON, EXCEPT FOR REPLACEMENT OR REASONABLE MAINTENANCE OF THE PRODUCT, FOR THE CASES, INCLUDING BUT NOT LIMITED TO BELOW:

(1) ANY LOSS OR DAMAGE, INCLUDING WITHOUT LIMITATION, DIRECT OR INDIRECT, SPECIAL, CONSEQUENTIAL OR EXEMPLARY, ARISING OUT OF OR RELATING TO THE PRODUCT;
(2) ANY INCONVENIENCE, LOSS, OR DAMAGE CAUSED BY INAPPROPRIATE USE OR NEGLIGENT OPERATION OF THE USER;
(3) ALL MALFUNCTIONS OR TROUBLES FROM UNAUTHORIZED DISASSEMBLE, REPAIR OR MODIFICATION OF THE PRODUCT BY THE USER, REGARDLESS OF THE CAUSE OF THE MALFUNCTION OR TROUBLE;
(4) INCONVENIENCE OR ANY LOSS ARISING WHEN IMAGES ARE NOT DISPLAYED, DUE TO ANY REASON OR CAUSE INCLUDING ANY FAILURE OR PROBLEM OF THE PRODUCT;
(5) ANY PROBLEM, CONSEQUENTIAL INCONVENIENCE, OR LOSS OR DAMAGE, ARISING OUT OF THE SYSTEM COMBINED BY THE DEVICES OF THIRD PARTY;
(6) ANY CLAIM OR ACTION FOR DAMAGES BROUGHT BY ANY PERSON OR ORGANIZATION AS A PHOTOGRAPHED SUBJECT DUE TO VIOLATION OF PRIVACY CONCERNING A SURVEILLANCE CAMERA'S PICTURE OR SAVED DATA, FOR SOME REASON (INCLUDING USE WHEN USER AUTHENTICATION ON THE AUTHENTICATION SETTING SCREEN IS SET TO OFF), BECOMING PUBLIC OR BEING USED FOR ANY PURPOSE;
(7) LOSS OF REGISTERED DATA CAUSED BY ANY FAILURE (INCLUDING INITIALIZATION OF THE PRODUCT DUE TO FORGOTTEN AUTHENTICATION INFORMATION SUCH AS A USER NAME AND PASSWORD).

Preface

This product is an outdoor use dome-type monitoring camera with a 10BASE-T/100BASE-TX network port for network connection.
By connecting to a network (LAN) or the Internet, images and audio from the camera can be monitored on a PC via a network.

Note:
- It is necessary to configure the network settings of the PC and its network environment to monitor images from the camera on the PC. It is also necessary to install a web browser on the PC.

Main functions

Distribution of approximate 5-megapixel moving images can be performed at up to 30 frames per second.

Adoption of new H.265 engine enables distribution of 2560 x 1920 (approx. 5 megapixels) high resolution moving images at up to 30 frames per second.

Delivers high image quality streaming at low bit rates thanks to a H.265 engine equipped with Panasonic's own Smart Coding technology[*1].

This allows H.265 compression in addition to conventional H.264 compression technology, and when combined with Smart Coding, reduces data load compared to our previous models.

Panasonic's own intelligent auto (iA) feature provides increased discernibility even in environments with poor visibility

Improvements to the Super Dynamic (SD) feature and shutter speed optimization provides clear discernibility even when monitoring moving people or car silhouettes or when license plates are illuminated by car headlights.

Auto focus (AF) function

Use the operation button or setting menu of the camera to activate the focus ring of the lens and automatically adjust focus.

Equipped with SD slot

It is possible to save H.265 / H.264 videos and JPEG images on the SD memory card manually when an alarm occurs, during the period of the schedule, or on a Web browser. (Downloading is possible.) It is also possible to save JPEG images if a network failure occurs.

Encryption and alteration detection functions enhanced the security.

Extension Software[*2] support

Installing Extension Software makes it possible to add functions that use image data.

ClearSight coating (rain wash coating)*3 for dome cover (Optional accessory: WV-CW7CN) adopted

The clear sight coating is a special coating applied to the surface of the transparent cover that makes it difficult for water droplets to adhere to the dome cover.

The camera conforms to the IP66*4 and Type 4X (UL50)*5, is compliant with NEMA 4X*6 ratings, and provides high dust resistance and waterproof performance.

Waterproofing treatment is not required for the camera body (Waterproofing treatment is required for cable connections).

Achieves high-level shock resistance with IK10*7 (IEC 62262) conformity.

The camera has a strong shock resistance body which is needed in outdoor installations.

*1 A technology to significantly reduce a band by increasing the compression ratio of areas where a subject does not move and optimizing the refresh interval and frame rate according to subject motions.

*2 For further information about Extension Software refer to our website (https://security.panasonic.com/support/info/ <Control No.: C0103>).
Refer to page 6 about "<Control No.: C****>".

*3 The rain wash coating is only effective against water (rain water) and is not effective against other substances such as oil or damage to the dome cover.

*4 IP66: The applicable product has “Dust tight (6)” protection against foreign solids and has “Powerful water jets (6)” protection against water (IEC60529).

*5 Type 4X (UL50): 4X indicates the rank in the UL waterproof standard.

*6 NEMA: Dust resistance and waterproof performance standards set by National Electrical Manufacturers Association (United States).

*7 IK10: is a standard in regards to shock resistance that represents the level of impact protection, and is regulated by the International Electrotechnical Commission (IEC).

About the user manuals

Product documentation is composed of the following documents.

- **Important Information (this document):** Provides basic information about the product such as Precautions for installation, Parts and functions, etc..
- **Installation Guide:** Explains installation, mounting, cable connections, and adjusting the field of view.
- **Operating Instructions (on the Panasonic support web site):** Explains how to perform the settings and how to operate this camera.

Note:

- The external appearance and other parts shown in this manual may differ from the actual product within the scope that will not interfere with normal use due to improvement of the product.
- "<Control No.: C****>" used in this document should be used to search for information on the Panasonic support website and will guide you to the right information.

System requirements for a PC

CPU:	Intel® Core™ i5-6500 or faster, or Intel® Core™ i7-6700 or faster recommended
Memory:	A minimum of 1 GB or more (for 32-bit OSs), 2 GB or more (for 64-bit OSs) memory is required. 4 GB (2 GB x 2, Dual Channel) or more recommended.
Network interface:	10BASE-T/100BASE-TX 1 port
Audio interface:	Sound card (when using the audio function)
Monitor:	Image capture size: 1024 x 768 pixels or more High-resolution monitoring: 3840 x 2160 pixels or more Color: 24-bit True color or better
OS:	Microsoft Windows 10 Microsoft Windows 8.1 Microsoft Windows 7
Web browser:	Windows Internet Explorer 11 (32-bit) Microsoft Edge Firefox Google Chrome™
Others:	CD-ROM drive (It is necessary to read the several kind of operating instructions and use the software on the provided CD-ROM.) Adobe® Reader® (It is necessary to view the PDF file on the Panasonic support web site or the provided CD-ROM.)

IMPORTANT:

- For information on the operation verification of the supported operating systems and web browsers, refer to our website at https://security.panasonic.com/support/info/ <Control No.: C0104, C0122>.
- When using a PC that does not meet the above requirements, displaying of images may become slower or the web browser may become inoperable.
- Audio may not be heard if a sound card is not installed on a PC. Audio may be interrupted depending on the network environment.
- Microsoft Windows RT and Microsoft Windows 7 Starter are not supported.
- When using Microsoft Windows 8.1, use it in the desktop. The software cannot be used in the Modern UI design.

Note:

- For further information about PC system requirements and precautions for when using Microsoft Windows or Windows Internet Explorer, click “Manual” - “Open” from the supplied CD-ROM and refer to “Notes on Windows / Internet Explorer versions”.

Trademarks and registered trademarks

- Microsoft, Windows, Windows Media, Internet Explorer, and ActiveX are either registered trademarks or trademarks of Microsoft Corporation in the United States and/or other countries.
- Microsoft product screen shot(s) reprinted with permission from Microsoft Corporation.
- Intel and Intel Core are trademarks of Intel Corporation or its subsidiaries in the U.S. and/or other countries.
- Adobe, Acrobat Reader, and Reader are either registered trademarks or trademarks of Adobe Systems Incorporated in the United States and/or other countries.
- SDXC Logo is a trademark of SD-3C, LLC.
- iPad and iPhone are trademarks of Apple Inc., registered in the U.S. and other countries.
- Android and Google Chrome are trademarks of Google LLC.
- Firefox is a trademark of the Mozilla Foundation in the US and other countries.
- The word “QR Code” is a registered trademark of DENSO WAVE INCORPORATED in Japan and other countries.
- All other trademarks identified herein are the property of their respective owners.

Copyright

Except for open source software licensed under GPL/LGPL and so on, distributing, copying, disassembling, reverse compiling and reverse engineering of the software provided with this product are all expressly prohibited. In addition, exporting any software provided with this product violating export laws is prohibited.

Open Source Software

- This product contains open source software licensed under GPL (GNU General Public License), LGPL (GNU Lesser General Public License), etc.
- Customers can duplicate, distribute and modify the source code of the software under license of GPL and/or LGPL.
- Refer to the “readme.txt” file on the provided CD-ROM for further information about open source software licenses and the source code.
- Please note that Panasonic shall not respond to any inquiries regarding the contents of the source code.

Network security

As you will use this unit connected to a network, your attention is called to the following security risks.

① Leakage or theft of information through this unit
② Use of this unit for illegal operations by persons with malicious intent
③ Interference with or stoppage of this unit by persons with malicious intent

It is your responsibility to take precautions such as those described below to protect yourself against the above network security risks.

- Use this unit in a network secured by a firewall, etc.
- If this unit is connected to a network that includes PCs, make sure that the system is not infected by computer viruses or other malicious entities (using a regularly updated anti-virus program, anti-spyware program, etc.).
- To prevent unauthorized access, use user-authentication, set user names and passwords, and limit which users can log in.
- Apply measures such as user authentication to protect your network against leakage or theft of information, including image data, authentication information (user names and passwords), alarm mail information, FTP server information and DDNS server information.
- After the unit is accessed by the administrator, make sure to close the browser.
- Change the administrator password periodically. Additionally, save user authentication information (user names and passwords) in such a way that it is kept out of the hands of third parties.
- Do not install the camera in locations where the camera or the cables can be destroyed or damaged by persons with malicious intent.

Precautions

Do not insert any foreign objects.
Fire or electrical shock may be caused if water or any foreign objects, such as metal objects, enter inside the unit.
Turn the power off immediately and contact qualified service personnel for service.

Do not use this product in an inflammable atmosphere.
Failure to observe this may cause an explosion resulting in injury.

Avoid installing this product in the locations where salt damage occurs or corrosive gas is produced.
Otherwise, the mounting portions will deteriorate and accidents such as a fall of the product may occur.

Do not strike or give a strong shock to this product.
Failure to observe this may cause fire or injury.

Keep SDXC/SDHC/SD memory cards away from infants and children.
Otherwise, they may swallow the cards by mistake.
In this case, consult a doctor immediately.

Do not hang down from this product or use this product as a pedestal.
Failure to observe this may cause a drop resulting in accidents.

Do not damage the power cable.
Do not damage, fabricate, twist, stretch, bundle, or forcibly bend the power cable. Do not place heavy objects on it, and keep it away from heat sources.
Use of a damaged power cable may cause electric shock, short circuit, or fire.
Consult the dealer for repair.

Do not sprinkle more water, exceeding the performance limit of waterproof with a high pressure cleaning machine, etc.
Fire or electrical shock may be caused by immersion.

Do not attempt to disassemble or modify this product.
Failure to observe this may cause fire or electric shock.
Consult the dealer for the repair or inspections.

Do not install or clean the camera, or touch this product, the power cable or the connected cables during thunder storms.
Failure to observe this may cause electric shock.

Refer installation work to the dealer.
Installation work requires technique and experience. Failure to observe this may cause fire, electric shock, injury, or damage to the product. Be sure to consult the dealer.

Stop the operation immediately when something is wrong with this product.
When smoke goes up from the product, the smell of smoke comes from the product, or the exterior of the product has deteriorated, continued use will cause a fire or fall of the product resulting in injury, or damage to the product.
In this case, turn the power off immediately and contact qualified service personnel for service.

Select an installation area that can support the total weight.
Selecting an inappropriate installation surface may cause this product to fall down or topple over, resulting in injury or accidents.
Installation work shall be started after sufficient reinforcement.

Periodic inspections shall be conducted.
Rust on the metal parts or screws may cause a fall of the product resulting in injury or accidents.
Consult the dealer for the inspections.

The exclusively designed mount bracket shall be used.
Failure to observe this may cause a drop resulting in injury or accidents.
Use the exclusively designed mount bracket for installation.

The screws and bolts must be tightened to the specified torque.
Failure to observe this may cause a drop resulting in injury or accidents.

Turn the power off when do wiring of this product.
Failure to observe this may cause electric shock. In addition, short circuit or wrong wiring may cause fire.

Install this product in a location high enough to avoid people and objects from bumping the product.
Failure to observe this may cause injury.

Do not install this product in locations subject to vibration.
Loosening of mounting screws or bolts may cause a fall of the product resulting in injury or accidents.

Correctly perform all wiring
Short circuits in the wiring or incorrect wiring may cause fire or electrical shock.

Install the product securely on a wall or a ceiling in accordance with the installation instructions.
Failure to observe this may cause injury or accidents.

Turn the power off when cleaning this product.
Failure to observe this may cause injury.

Do not rub the edges of metal parts with your hand.
Failure to observe this may cause injury.

Do not touch the metal part of the bottom side of the product.
The metal part of the bottom side may become hot while the product is in use. Direct skin contact with high-temperature parts of the product may cause burns.

[Precautions for use]

When the product is accessible from the Internet

To prevent unauthorized access, note the following.

- Leave user authentication turned on.
- Periodically change passwords that are used to access the product.
  Refer to the Operating Instructions on the Panasonic support web site for information about how to change passwords.

To keep on using with stable performance
Do not use this product in hot and humid conditions for a long time. Failure to observe this causes component degradation resulting in life shortening of this product. Do not expose this product to direct heat sources such as a heater.

This product has no power switch.
When turning off the power, disconnect the power supply from the 12 V DC power supply or the PoE device.

Handle this product with care.
Do not drop this product, nor apply shock or vibration to the product. Failure to observe this may cause trouble.

About the battery
A battery is installed inside the camera. Do not leave the battery exposed in environments of excessive heat as a result of sunlight or fire.

Do not subject dome cover to strong impact.
Doing so may cause damage or immersion.

Do not touch the dome cover with your bare hands.
A dirty dome cover causes deterioration of picture quality.

When an error is detected, this product will restart automatically.
This product will be inoperable for around 2 minutes after the restart just as when the power is turned on.

About the automatic status detection function
When this product malfunctions due to exogenous noise, etc. for 30 seconds or more, the product will automatically reset and will return to normal state. When the product is reset, initialization will be carried out as when the power of the product is turned on. When the product repeatedly resets, exogenous noise level around the product may be high and that may cause malfunction. Contact your dealer for instructions.

Periodically images on the screen appear to be distorted
When the camera is installed in a location where it is subject to small vibrations (for example, when it is installed near devices that vibrate), images may appear distorted and stretched lengthways. This phenomenon is a characteristic of image pickup devices that use CMOS sensors and is caused by the relationship between the periodic movements of the camera and the timing that the image sensor reads images. This is not a problem with the camera. To reduce the possibility of this phenomenon occurring, install the camera in a secure location.

About the ventilation opening
There is a ventilation opening inside the enclosure. Do not caulk (fill the clearance between the enclosure and the ceiling or wall with sealants or other materials) as internal humidity is discharged through this ventilation opening. Water does not come inside.

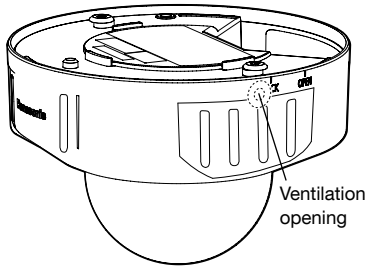

What to do if “WARMING UP-PLEASE WAIT” appears on the display.
This message indicates that the temperature inside the camera has become extremely low. The camera will be automatically restarted when the inside the camera is warmed up by the built-in heater. Please wait for a while.

We shall not be liable for content compensation, losses of recorded or edited content and any direct or indirect consequent damages caused by failure to record or edit due to faults with this unit or the SD memory card. In addition, the same provisions apply after unit is reparied.

About the CMOS image sensor
- When continuously shooting a bright light source such as a spotlight, the color filter of the CMOS image sensor may become deteriorated and this may cause discoloration. Even when changing the fixed shooting direction after continuously shooting a spotlight for a certain period, the discoloration may remain.
- When shooting fast-moving subjects or objects crossing the shooting area may look to be bending askew.

Cleaning this product body
Be sure to turn off the power before cleaning. Failure to observe this may cause injury. Do not use benzine, thinner, alcohol, or any other types of solvents or detergents. Otherwise, it may cause discoloration. When using a chemical cloth for cleaning, read the caution provided with the chemical cloth product.
Do not loozen or remove screws unless instructed to do so in the product documentation.

Cleaning the lens
Use a lens cleaning paper (used to clean camera lenses or lenses of spectacles). When using solvent, use an alcohols solvent and do not use a thinner or a glass cleaner.

Cleaning of the dome cover
Use lens cleaning paper (used to clean camera or spectacles lenses) to remove any dirt on the dome cover. (If dust or the like is adhered at this time, the dome cover may get scratched. We recommend rinsing for stubborn stains.)
The mark of light-shielding parts left inside the dome or dirt on the dorm cover may influence the reflection of infrared rays. Therefore, likewise remove those marks and dirt using cleaning paper.

AVC Patent Portfolio License
THIS PRODUCT IS LICENSED UNDER THE AVC PATENT PORTFOLIO LICENSE FOR THE PERSONAL USE OF A CONSUMER OR OTHER USES IN WHICH IT DOES NOT RECEIVE REMUNERATION TO (i) ENCODE VIDEO IN COMPLIANCE WITH THE AVC STANDARD (“AVC VIDEO”) AND/OR (ii) DECODE AVC VIDEO THAT WAS ENCODED BY A CONSUMER ENGAGED IN A PERSONAL ACTIVITY AND/OR WAS OBTAINED FROM A VIDEO PROVIDER LICENSED TO PROVIDE AVC VIDEO. NO LICENSE IS GRANTED OR SHALL BE IMPLIED FOR ANY OTHER USE. ADDITIONAL INFORMATION MAY BE OBTAINED FROM MPEG LA, L.L.C.
SEE HTTP://WWW.MPEGLA.COM

Equipment classification and power source indication label
Refer to the indication label on the bottom side of this unit for the equipment classification, power source, and other information.

Product disposal/transfer
Data saved on this product or a storage device used with this product may lead to personal information leakage. When it is necessary to dispose or give this product to someone, even when for repair, make sure that there is no data on this product.
When abandoning the memory media, it is recommended to destroy it physically after deleting data by PC.

Meaning of symbols
: Direct current symbol

Precautions for installation

Panasonic assumes no responsibility for injuries or property damage resulting from failures arising out of improper installation or operation inconsistent with this documentation.
For information about the installation tasks, refer to the provided Installation Guide.

In order to prevent injury, the product must be securely mounted to a wall or ceiling according to Installation Guide.

Power supply
This product has no power switch.
When performing electrical work, make sure the camera can be turned on and off. When an Ethernet cable or power cable is connected, the power is turned on. When cleaning the product, remove the Ethernet cable or disconnect the power cable from the main power supply.

Installation area for this product
Select an appropriate place for the installation area (such as a strong wall or ceiling) in your particular environment.

- Make sure that the installation area is strong enough to hold this product, such as a concrete ceiling.
- Install the camera in the foundation area of the architecture or where sufficient strength is assured.
- Do not mount the product on a plaster board or a wooden section because they are too weak. If the product is unavoidably mounted on such a section, the section shall be sufficiently reinforced.

Install the product in areas that do not receive direct sunlight.

- When the product is installed outside in areas that receive direct sunlight, such as on external walls, use the optional "Sun Shade WV-Q7118".

Do not place this product in the following places:

- Locations where a chemical agent is used such as a swimming pool
- Locations subject to moisture or oil smoke such as a kitchen
- Locations that have a specific environment that is subject to an inflammable atmosphere or solvents
- Locations where a radiation, an X-ray, a strong radio wave or a strong magnetic field is generated
- Locations near coasts directly subjected to sea breezes, or locations subject to corrosive gases such as from hot springs, volcanic regions, etc.
- Locations where the temperature is not within the specified range (☞ page 26)
- Locations subject to vibrations, such as on vehicles, marine vessels, or above product lines (This product is not designed for on-vehicle use.)
- Locations subject to condensation as the result of severe changes in temperature (In case of installing the product in such locations, the dome cover may become foggy or condensation may be caused on the cover.)

Sulfurization caused by rubber products
Do not place the product near rubber products (packing, rubber feet, etc.) that contain sulfur. There is a risk that sulfur components in rubber products may cause electrical parts and terminals, etc. to become sulfurized and corrode.

Screw tightening

- The screws and bolts must be tightened with an appropriate tightening torque according to the material and strength of the installation area.
- Do not use an impact driver. Use of an impact driver may damage the screws or cause tightening excessively.
- When a screw is tightened, make the screw at a right angle to the surface. After tightening the screws or bolts, perform checks to ensure that the tightening is sufficient enough so that there is no movement or looseness.

Heater unit
This product is equipped with an internal heater unit for use in cold climates. The heater unit turns on automatically when the temperature inside the product drops below around 0 °C {32 °F}. When this product is installed and operated in low temperatures below –20 °C {–4 °F}, it may require time to start up since the camera will wait to be warmed up internally by the internal heater right after the power is turned on. Also, the camera may not function properly, if it is installed and operated in an environment where the temperature is below –30 °C {–22 °F}. In such a case, wait approximately 2 hours or more until the camera is warmed up. Then, turn on the power again. As the camera warms up, snow or frost accumulated on the dome cover will melt. However, it may not be defrosted from the cover depending on the ambient temperature or weather condition.

Effects on images and image quality
Under the following conditions, image quality may deteriorate or images may become difficult to see.

- When there are raindrops on the dome cover due to wind during rainfall.
- When there is snow on the dome cover due to wind during snowfall. (varies depending on the amount and quality of snowfall).
- When the dome cover is dirty due to dust in the air or vehicle exhaust.

About reflection of light from outside or IR light
Depending on the incident angle of high intensity light source such as sunlight or lighting, images of non-existing objects (reflected light) or reflections of surroundings on the camera lens (ghost) may sometimes appear on the screen. Especially in the case of LED light, these phenomena may be seen remarkably. In the case of using the IR light, installation of a camera near a wall may cause reflection of infrared rays resulting in a part of the screen or the entire screen turning whitish. Therefore, consider the installation place carefully.
*** Refer to our website (https://security.panasonic.com/support/info/ <Control No.: C0109>) for image examples and measures to take.**

Protection from lightning
When cables are used outdoors, there is a chance that they may be affected by lightning. In such a case, install a lightning arrestor close to the camera, and make the length of the network cable between the camera and lightning arrestor as short as possible to prevent the camera from being damaged by lightning.

Take notice of humidity
Install this product when the humidity is low. If installation is performed when it is raining or in very humid conditions, the inside may be affected by humidity, causing mist-over inside the dome cover

When noise disturbance may happen
Conduct the power distribution work to keep a distance of 1 m {3.28 feet} or more from the 120 V (for U.S. and Canada) or 220 V – 240 V (for Europe and other countries) power line. Or conduct the electric conduit work separately (Always connect the metal pipe with grounding).

Radio disturbance
Noise may appear in video or audio near a strong electric field from a TV or radio antenna, motors and transformers, or a strong electric field/magnetic field from a power line (lamp line) of AC100 V or more.

PoE (Power over Ethernet)
Use a PoE hub/device that is compliant with IEEE802.3af standard.

Router
When connecting this product to the Internet, use a broadband router with the port forwarding function (NAT, IP masquerade).
Refer to the Operating Instructions on the Panasonic support web site for further information about the port forwarding function.

Time & date setting
It is necessary to set the time & date before putting this product into operation. Refer to the Operating Instructions on the Panasonic support web site for descriptions of how to perform the settings.

Make sure to remove this product if it will no longer be used.

Parts and functions

【Whole unit】

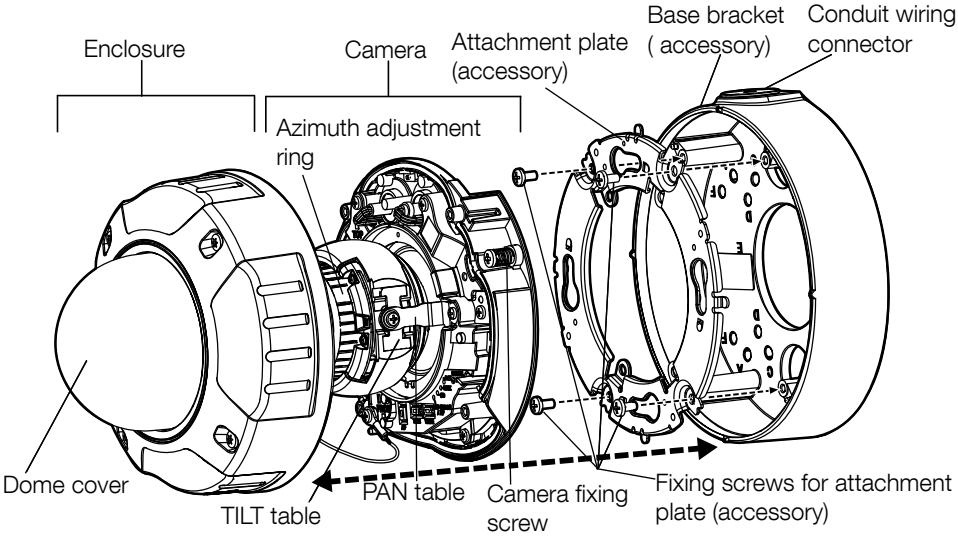

【Camera body】

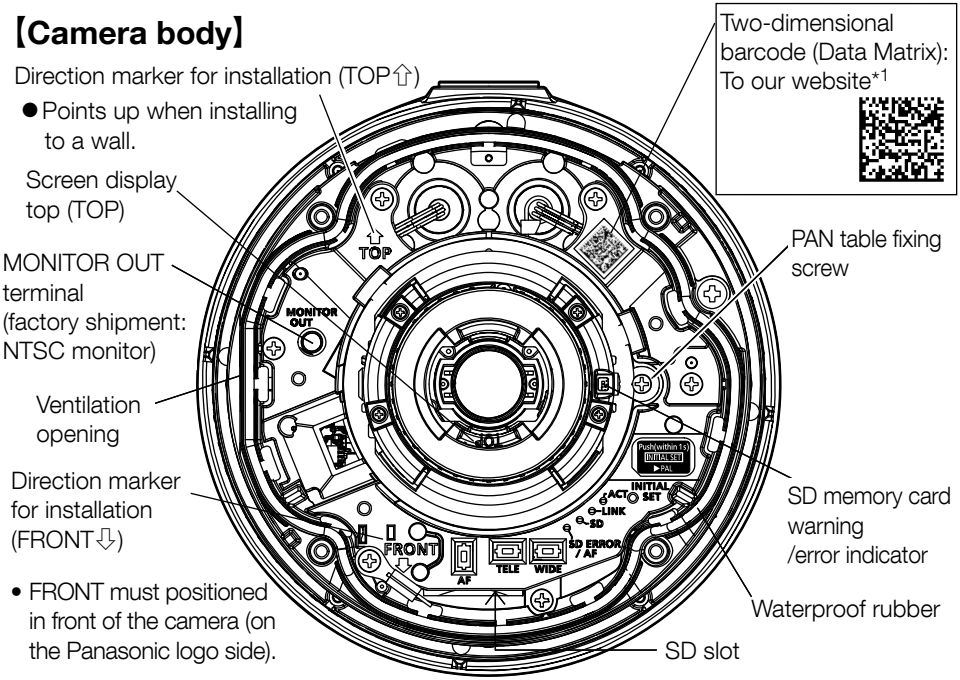

*1 Depending on the scanning application used, the Data Matrix may not be able to be read correctly. In this case, access the site by directly entering the following URL.
https://security.panasonic.com/support/qr_sp_select/

■ Cables

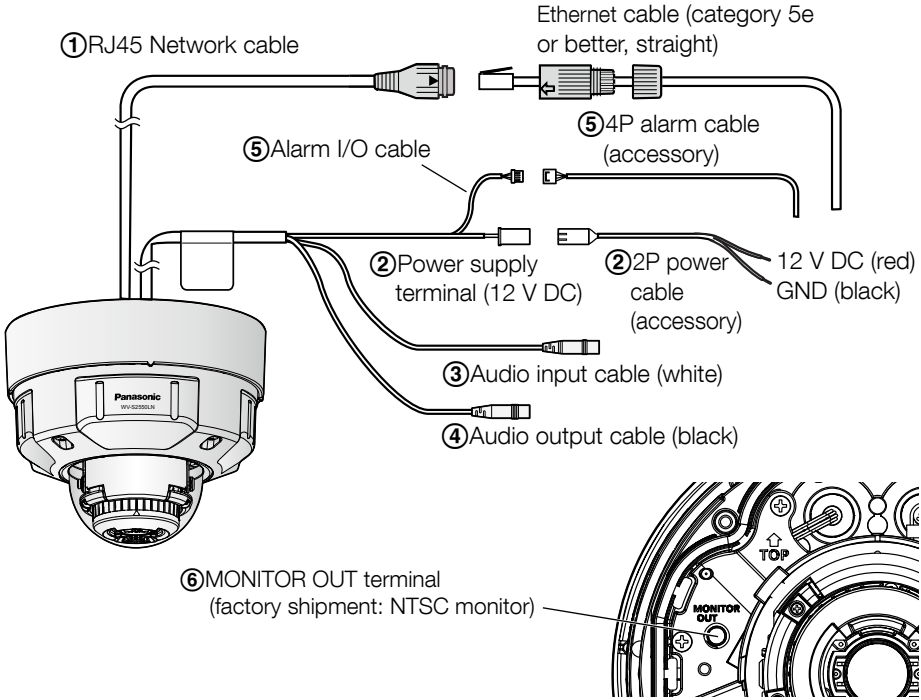

①RJ45 Network cable

Connect an Ethernet cable (category 5e or better, straight) to the network connector.

IMPORTANT:

- Use all 4 pairs (8 pins) of the Ethernet cable.
- The maximum cable length is 100 m {328 feet}.
- Make sure that the PoE device in use is compliant with IEEE802.3af standard.
- When connecting both the 12 V DC power supply and the PoE device for power supply, 12 V DC will be used for power supply.
- When the Ethernet cable is disconnected once, reconnect the cable after around 2 seconds. When the cable is quickly reconnected, the power may not be supplied from the PoE device.

②Power supply terminal (12 V DC) / 2P power cable (accessory)

Caution:

- A READILY ACCESSIBLE DISCONNECT DEVICE SHALL BE INCORPORATED TO THE EQUIPMENT POWERED BY 12 V DC POWER SUPPLY.
- ONLY CONNECT 12 V DC CLASS 2 POWER SUPPLY (UL 1310/CSA 223) or LIMITED POWER SOURCE (IEC/EN/UL/CSA 60950-1).

Connect the output cable of the DC power supply to the 2P power cable (accessory).

IMPORTANT:

- Be sure to use the 2P power cable (accessory) provided with this product.
- Be sure to fully insert the 2P power cable (accessory) into the power supply terminal (12 V DC). Otherwise, it may damage the camera or cause malfunction.
- When installing the camera, make sure that excessive force is not applied to the power cable.
- Be sure to use an AC adaptor compliant with the Specifications (written in the indication label on the bottom side of this unit) regarding power source and power consumption.

③Audio input cable (white)

Connect a microphone or the line out of an external device using a stereo mini plug (ø3.5 mm).

<For microphone input>

- Recommended microphone : Plug-in power type (locally procured)
  (Sensitivity of microphone : –48 dB ±3 dB (0 dB=1 V/Pa,1 kHz))
- Input impedance : Approx. 2 kΩ (unbalanced)
- Supply voltage : 2.5 V ±0.5 V
- Recommended cable length : Less than 1 m {3.28 feet}

<For line input>

- Input level for the line input : Approx. –10 dBV
- Recommended cable length : Less than 10 m {32.8 feet}

④Audio output cable (black)

Connect an external speaker* using a stereo mini plug (ø3.5 mm). (Audio output is monaural.)

- Output impedance : Approx. 600 Ω (unbalanced)
- Recommended cable length : Less than 10 m {32.8 feet}
- Output level : –20 dBV

*Use a powered speaker.

IMPORTANT:

- Connect/disconnect the audio cables and turn on the power of the camera after turning off the power of the audio output devices. Otherwise, loud noise may be heard from the speaker.
- Make sure that the stereo mini plug is connected to this cable. When a monaural mini plug is connected, audio may not be heard.
  When connecting a monaural speaker with amplifier, use a locally procured conversion cable (mono-stereo).

Note:

- The audio output can be switched to the monitor output*1. Refer to the Operating Instructions on the Panasonic support web site for descriptions of how to switch the output.
- The monitor out is set to NTSC in the default settings of the camera. If you want to change the monitor out setting to PAL, refer to the Operating Instructions on the Panasonic support web site.

*1 MONITOR OUT terminal (factory shipment: NTSC monitor)
Used to connect a monitor for adjustments during installation or when performing service.

⑤Alarm I/O cable / 4P alarm cable (accessory)

Note:

- Off, input, and output of the EXT I/O terminal 2 and 3 can be switched by configuring the setting. Refer to the Operating Instructions on the Panasonic support web site for further information about the EXT I/O terminal 2 and 3 (ALARM IN2, 3) settings ("Off", "Alarm input", "Alarm output" or "AUX output").

<Ratings>

- Alarm input1 / Black & white input / Auto time adjustment input, Alarm input2, Alarm input3

Input specification	:	No-voltage make contact input (4 V - 5 V DC, internally pulled up)
OFF	:	Open or 4 V - 5 V DC
ON	:	Make contact with GND (required drive current: 1 mA or more)

- Alarm output, AUX output

Output specification	:	Open collector output (maximum applied voltage: 20 V DC)
ON	:	4 V - 5 V DC by internal pull-up
OFF	:	Output voltage 1 V DC or less (maximum drive current: 50 mA)

4P alarm cable

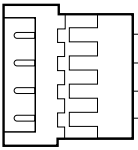

IMPORTANT:

- Install external devices so that they do not exceed the rating of the network camera.
- When using the EXT I/O terminals as the output terminals, ensure they do not cause signal collision with external signals.

⑥MONITOR OUT terminal (factory shipment: NTSC monitor)

Used to connect a monitor used for adjustments during installation or when performing service.

IMPORTANT:

- The adjustment monitor is used for checking the adjustment of the angular field of view when installing the camera or when servicing. It is not provided for recording/monitoring use.
- Depending on the monitor, some characters (date, time, camera title, etc.) may not be displayed on the screen.

When connecting to a network using a PoE hub

Before starting the installation, check the entire system configuration. The following illustration gives a wiring example of how to connect the camera to the network via a PoE device (hub).

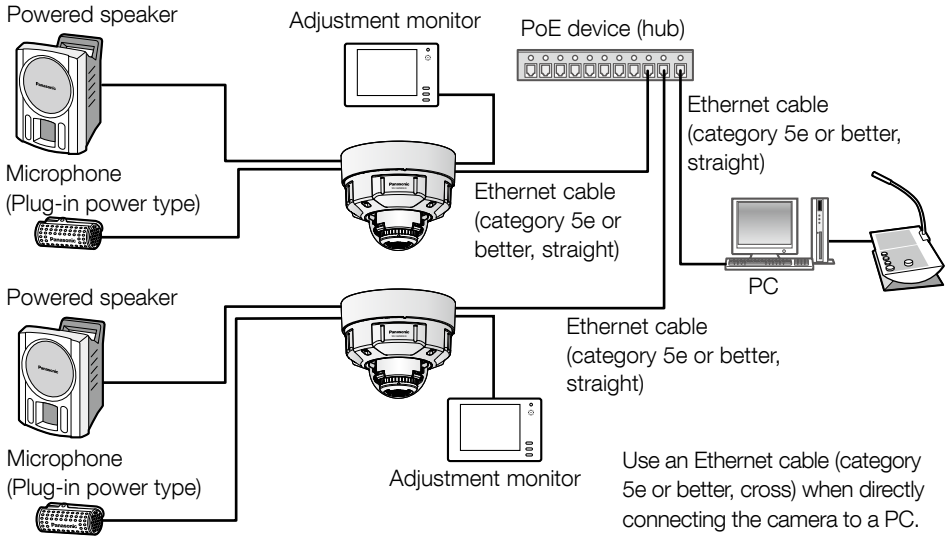

IMPORTANT:

- Use a switching hub or a router which is compliant with 10BASE-T/100BASE-TX.
- If a PoE hub is not used, each network camera must be connected to a 12 V DC power supply.
- When using 12 V DC, power supply from a PoE hub or router is not required.

■ Indicators and buttons

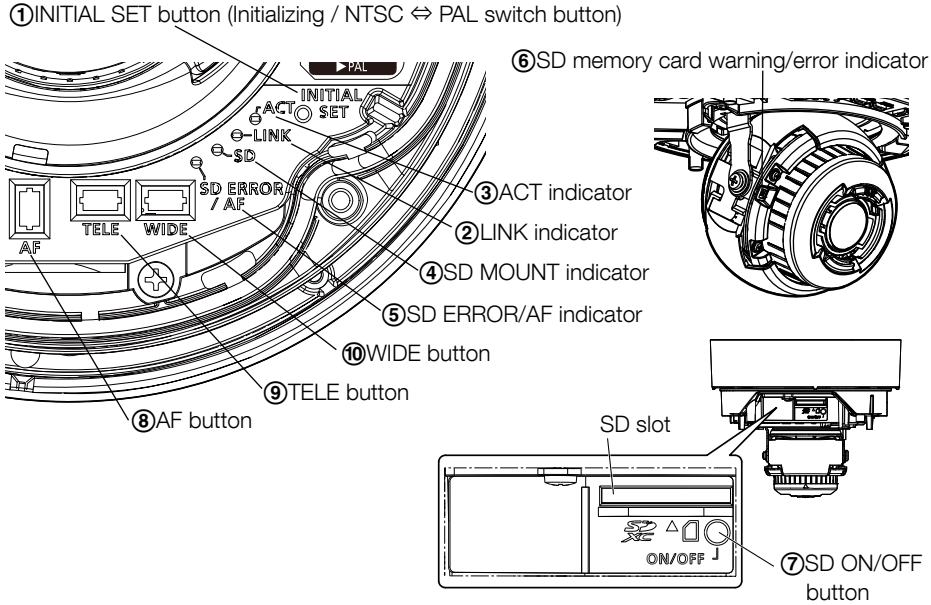

①INITIAL SET button (Initializing / NTSC ⇔ PAL switch button)

Follow the steps below to initialize the network camera.

(1)Turn off the power of the camera.

When using a PoE hub, disconnect the Ethernet cable from the camera. When using an external power supply, disconnect the 2P power cable (accessory) from the power supply terminal (12V DC).

(2)Turn on the power of the camera while pressing the INITIAL SET button, and make sure to release the button after approximately 15 seconds. In about 2 minutes later, the camera will start up and the settings including the network settings will be initialized. Retry if the camera does not start up normally.

IMPORTANT:

- When the camera is initialized, the settings including the network settings will be initialized. Before initializing the settings, it is recommended to write down the settings in advance.
- Do not turn off the power of the camera during the process of initialization. Otherwise, it may fail to initialize and may cause malfunction.

- When the INITIAL SET button is pressed (less than 1 second) to switch the output signal of the MONITOR OUT terminal, the MONITOR OUT terminal can be switched for the NTSC monitor ⇔ PAL monitor.

②LINK indicator

● When the camera is able to communicate with the connected device	Lights orange

③ACT indicator

● When data is being sent via the network camera	Blinks green (accessing)

④SD MOUNT indicator

● When an SD memory card is inserted and could be recognized	Lights off → Blinks green → Lights off
● When data can be saved after the SD memory card is inserted and the SD ON/OFF button is pressed (less than 1 second)	Lights off → Lights green
● When data can be saved to the SD memory card	Lights green
● When the SD memory card is removed after holding down the SD ON/OFF button (about 2 seconds)	Lights green → Blinks green → Lights off (recording) Lights green → Lights off (waiting for recording)
● When data cannot be saved to the SD memory card because an abnormality was detected or the SD memory card is configured not to be used	Lights off

⑤SD ERROR/AF indicator

● When AF (Auto Focus) operation is being executed	Blinks red (Interval of 1 time/ second)
● When the set is being started	Lights red
● When an SD memory card is recognized normally	Lights red → Lights off
● When the SD slot is not used or an abnormality is detected in SD card after the camera has started	Lights red → Stays red

Note:

● Lighting/blinking LED can be turned off with the software settings at any time. (The initial state is lighting or blinking.) Set the LED to be solid off if necessary, depending on the installation conditions. (☞ Operating instructions on the Panasonic support web site)

⑥SD memory card warning/error indicator

● When a warning status is detected	Lights red
*SD memory card warning detection conditions: After the total use time has exceeded 6 years and the number of overwrite times has exceeded 2000.	
● When an error status is detected	Blinks red
*SD memory card error detection conditions: Write error, read error, etc.	

Note:

● The default is off. According to the installation environment, set up with software as required. (☞ Operating instructions on the Panasonic support web site)

⑦SD ON/OFF button

(1) When the SD ON/OFF button is pressed (less than 1 second), the SD MOUNT indicator lights up in green and data can be saved to the SD memory card.

(2) When the SD ON/OFF button is held down (about 2 seconds), the SD MOUNT indicator lights off and the SD memory card can be removed.

⑧AF button

Used when adjusting the focus. Refer to the Installation Guide for details.

⑨TELE button

Click the TELE button to adjust the zoom ratio to the “Tele” side.

⑩WIDE button

Click the WIDE button to adjust the zoom ratio to the “Wide” side.

Insert / remove an SD memory card

Note:

- Refer to the Operating Instructions on the Panasonic support web site for further information about the SD memory card settings.

■ Insert an SD memory card

【1】 Remove the enclosure from the camera, insert an SD memory card fully into the SD slot until a click is heard.

- Insert the SD memory card with its label facing down.
- Insert the SD memory card with its back end at the same height as the lower part of the center SD guide rib until it makes a clicking sound.
- Take your fingers off the SD memory card and check that its back end does not protrude over the upper part of the SD guide rib.
- After the SD memory card has been inserted, press the SD ON/OFF button, and make sure the SD MOUNT indicator is continually lit.
- If you do not press the SD ON/OFF button after inserting the SD memory card, the SD MOUNT indicator is automatically lit approximately 5 minutes later.

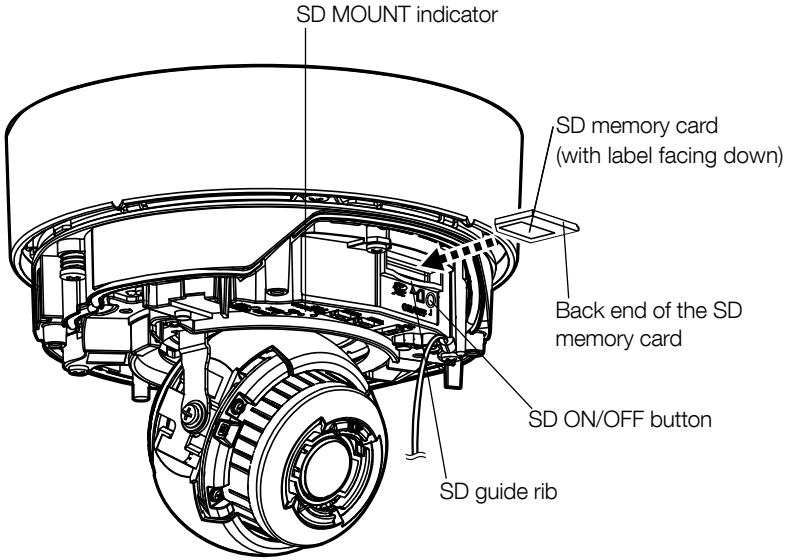

【2】 Attach the enclosure to the camera.

■ Remove an SD memory card

When removing an SD memory card, reverse the procedure.

- To remove the SD memory card, hold down the SD ON/OFF button for about 2 seconds. When the flashing SD MOUNT indicator goes out, you can remove the SD memory card.

IMPORTANT:

- Before turning off the camera power switch, make sure that the SD MOUNT indicator is turned off. If you turn off the camera power switch while the SD MOUNT indicator is lit or flashing, the recorded data may be corrupted or damaged.

Note:

- When using an SD memory card, format it using this product. Recorded data on the SD memory card will be deleted when formatted. If an unformatted SD memory card or an SD memory card formatted with other devices is used, this product may not work properly or performance deterioration may be caused. Refer to the Operating Instructions on the Panasonic support web site for how to format an SD memory card.
- When some SD memory cards are used with this product, the product may not work properly or performance deterioration may be caused. Use the compatible SD memory cards. (☞ page 30)

Troubleshooting

Before asking for repairs, check the symptoms with the following table.
Contact your dealer if a problem cannot be solved even after checking and trying the solution in the table or a problem is not described below.

Symptom	Cause/solution	Reference pages
Power is not turned on.	**When using a PoE device for power supply** • Are the PoE device and the network connector connected using an Ethernet cable (category 5e or better, straight)? Check whether the connection is appropriately established. • Depending on the PoE device, the power supply will stop when the demanded power exceeds its total power limit for all PoE ports. Refer to the operating instructions of the PoE device in use.	Installation Guide
	When using DC power supply • Is the 2P power cable (accessory) firmly inserted into the power supply terminal (12 V DC) of the camera? Confirm the power plug is firmly connected. • Is the AC adaptor in use compliant with the Specifications? Check the Specifications regarding AC adaptor.	
The LINK indicator does not light in orange even when the Ethernet cable is connected to the camera.	• Is the Ethernet cable connected appropriately? Connect the Ethernet cable appropriately. • Is the hub or router connected to the camera operating appropriately? Check if the hub or router in use is operating appropriately. • Isn't the Ethernet cable connected to the camera broken? Replace the cable with another one.	Installation Guide
SD ERROR/AF indicator lights red	**This indicator lights up red when data cannot be saved on the SD memory card.** • Isn’t the write protect switch of the inserted SD memory card set to “LOCK”? Unlock the write protect switch of the SD memory card. • Hasn't the inserted SD memory card been formatted on a PC? Use an SD memory card formatted on the camera. Or install the software to format the SD memory card on the PC. Refer to our website (https://security.panasonic.com/support/info/ <Control No.: C0105>) for further information about the supported software. • Isn't the inserted SD memory card faulty? Replace the card with a normal one.	22

Symptom	Cause/solution	Reference pages

Audio input contains noise.	• Check the following.
	  • Grounding of the camera, a switching hub or peripheral devices are not done.
	  • The camera is used near an electrical power line.
	  • The camera is used near a device which produces strong magnetic field or radio waves (such as near a TV/radio antenna, a motor of an air conditioning system, a transformer, etc.)
	When audio input still contains noise even after checking the above possibilities, use a powered microphone or connect audio output with low output impedance.
		14

The focus can not be able to be automatically adjusted.	• In the following locations or with the following subjects, the focus may not be able to be automatically adjusted. In this case, manually adjust the focus.
	  • When the subject moves a lot
	  • When there are large changes to the lighting intensity
	  • When the light level is low
	  • When the subject or location is extremely bright or reflective
	  • When viewing through windows
	  • When the dome cover is in a locations where it can easily become dirty
	  • Locations where there is not much contrast such as a white wall
	  • When there is harsh flickering
		Operating Instructions (on the Panasonic support web site)

Specifications

• Basic

Power source *1:	DC 12 V PoE (IEEE802.3af compliant)
Power consumption *1:	DC 12 V : 840 mA/Approx. 10.2 W PoE DC 48 V : 220 mA/Approx. 10.6 W (Class 0 device)
Operating environment Ambient operating temperature: Ambient operating humidity:	 –40 °C to +60 °C *2 {–40 °F to 140 °F} (Power On range: –30 °C to +60 °C {–22 °F to 140 °F}) 10 % to 100 % (no condensation)
Storage environment Storage temperature: Storage humidity:	 –30 °C to +60 °C {–22 °F to 140 °F} 10 % to 95 % (no condensation)
Monitor output (for adjustment):	VBS: 1.0 V [p-p]/75 Ω, composite, ø3.5 mm mini jack An NTSC or PAL signal can be outputted from camera (either press the INITIAL SET switch quickly (within 1 second) or use software to select NTSC or PAL signal).
EXT I/O terminals:	ALARM IN1 (Alarm input 1/ Black & white input/ Auto time adjustment input) (x1) ALARM IN2 (Alarm input 2/ ALARM OUT) (x1) ALARM IN3 (Alarm input 3/ AUX OUT) (x1)
Audio input: For microphone input: For line input:	ø3.5 mm stereo mini jack Recommended applicable microphone: Plug-in power type (Sensitivity of microphone: -48 dB±3 dB (0 dB=1 V/Pa, 1 kHz)) Input impedance: Approx. 2 kΩ (unbalanced) Supply voltage: 2.5 V ±0.5 V Input level: Approx. –10 dBV
Audio output *3:	ø3.5 mm stereo mini jack (Audio output is monaural.) Output impedance: Approx. 600 Ω (unbalanced) Output level: –20 dBV
Waterproof *4:	IP66 (IEC60529), Type 4X (UL50), NEMA 4X compliant
Shock resistance:	50 J (IEC 60068-2-75 compliant), IK10 (IEC62262)
Dimensions:	**When using base bracket:** ø164 mm × 139 mm (H) {ø6-15/32 inches × 5-15/32 inches (H)} Dome radius 42 mm {1-21/32 inches} **When using attachment plate only:** ø154 mm × 103 mm (H) {ø6-1/16 inches × 4-1/16 inches (H)} Dome radius 42 mm {1-21/32 inches}
Mass:	**When using base bracket:** Approx. 1.6 kg {3.53 lbs} **When using attachment plate only:** Approx. 1.2 kg {2.65 lbs}
Finish:	**Main body**: Aluminum die cast, Light gray **Outer fixing screws**: Stainless steel (Corrosion-resistant treatment) **Dome cover**: Polycarbonate resin, Clear

Others:	Tamper-resistant enclosure*5

*1 Refer to our website (https://security.panasonic.com/support/info/ <Control No.: C0106>) for further information about Power source and Power consumption information.
*2 In the environment where IR-LED is always turned on, make sure that the temperature is between –40° C and +50 °C {–40 °F to 122 °F}.
*3 The audio output can be switched to the monitor output. Refer to the Operating Instructions on the Panasonic support web site for descriptions of how to switch the output.
*4 Only when installation work is properly performed according to the Installation Guide and appropriate waterproof treatment is performed.
*5 Component that has a structure on which the screws that are accessible after installation cannot be screwed or unscrewed using an ordinary screwdriver.

• Camera

Image sensor:	1/2.8 type CMOS image sensor
Effective pixels:	Approx. 5.1 megapixels
Scanning area:	5.12 mm (H) × 3.84 mm (V) {3/16 inches (H) × 5/32 inches (V)}
Scanning system:	Progressive
Minimum illumination:	Color: 0.07 lx {0.0065 footcandle} (F1.3, Maximum shutter: Off (1/30 s), AGC: 11) 0.0044 lx {0.00041 footcandle} (F1.3, Maximum shutter: max. 16/30 s, AGC: 11)* BW : 0 lx {0 footcandle} (F1.3, Maximum shutter: OFF (1/30 s), AGC: 11, when the IR LED is lit) 0.004 lx {0.00037 footcandle} (F1.3, Maximum shutter: Off (1/30 s), AGC: 11) 0.003 lx {0.00028 footcandle} (F1.3, Maximum shutter: max. 16/30 s, AGC: 11)* * Converted value
Intelligent auto:	On/ Off
Super Dynamic:	On / Off, the level can be set in the range of 0 to 31.
Dynamic range:	Max. 120 dB (Super Dynamic: On, Level: 30 or more, 15fps *1)
Maximum gain:	The level can be set in the range of 0 to 11.
Adaptive black stretch:	The level can be set in the range of 0 to 255.
Back light compensation (BLC) /High light compensation (HLC):	BLC/ HLC/ Off The level can be set in the range of 0 to 31. (only when Super Dynamic/ Intelligent auto: Off)
Fog compensation:	On/ Off The level can be set in the range of 0 to 8. (only when Intelligent auto / auto contrast adjust: Off)
Light control mode setting:	Outdoor scene/ Indoor scene (50 Hz)/ Indoor scene (60 Hz)/ Fix shutter
Shutter speed:	1/30 Fix, 3/120 Fix, 2/100 Fix, 2/120 Fix, 1/100 Fix, 1/120 Fix, 1/250 Fix, 1/500 Fix, 1/1000 Fix, 1/2000 Fix, 1/4000 Fix, 1/10000 Fix

Maximum shutter:	Max.1/4000s, Max.1/2000s, Max.1/1000s, Max.1/500s, Max.1/250s, Max.1/120s, Max.1/100s, Max.2/120s, Max.2/100s, Max.3/120s, Max.1/30s, Max.2/30s, Max.4/30s, Max.6/30s, Max.10/30s, Max.16/30s
Color/BW:	Off/ On(IR Light Off)/ On(IR Light On)/ Auto1(IR Light Off)/ Auto2(IR Light On)/ Auto3(SCC)
IR LED Light:	High/ Middle/ Low/ Off Maximum irradiation distance: 40 m {Approx. 131 ft}
White balance:	ATW1/ ATW2/ AWC
Digital noise reduction:	The level can be set in the range of 0 to 255.
Privacy zone:	On/ Off (up to 8 zones available)
Camera title on screen:	On/ Off Up to 20 characters (alphanumeric characters, marks)
Video Motion Detection (VMD):	On/ Off, 4 areas available
Image rotation *3:	0 ° (Off) / 90 ° *2/ 180 °/ 270 ° *2

*1 The frame rate is limited to 15 fps for level 30 or higher. The dynamic range is 108 dB typ / 30 fps for level 29 or lower.
*2 Settings of [90 °] and [270 °] are only available for the [16:9 mode].
*3 Following the setting angle of the rotated image, the analog output of the MONITOR OUT terminal rotates.

• Lens

Zoom ratio:	3.1x Optical zoom 9.3x Extra optical zoom is available (when resolution is 640x360). (Motorized zoom / Motorized focus)
Digital (electronic) zoom:	Choose from 3 levels of x1, x2, x4
Focal length:	2.9 mm – 9 mm {1/8 inches – 11/32 inches}
Maximum aperture ratio:	1:1.3 (WIDE) – 1:2.5 (TELE)
Focus range:	0.3 m {11-13/16 inches} – ∞
Aperture range:	F1.3 – Close
Angular field of view:	**[16:9 mode]** Horizontal: 33 ° (TELE) – 103 ° (WIDE) Vertical: 19 ° (TELE) – 55 ° (WIDE) **[4:3 mode]** Horizontal: 33 ° (TELE) – 103 ° (WIDE) Vertical: 25 ° (TELE) – 75 ° (WIDE)
Adjusting angle:	Horizontal (PAN) angle: ±180 ° Vertical (TILT) angle : +85 ° to –30 ° Azimuth (YAW) angle : ±100°

• **Network**

Network:	10BASE-T/100BASE-TX, RJ45 connector
Resolution *1: H.265/ H.264 JPEG (MJPEG)	**[16:9 mode]** 3072×1728 *2, 2560×1440, 1920×1080, 1280×720, 640×360, 320×180 **[4:3 mode]** 3072×2304 *2, 2560×1920, 1280×960, 800×600, VGA, 400×300, QVGA
Image compression method *3: H.265/ H.264	**Transmission priority:** Constant bit rate / VBR / Frame rate / Best effort **Frame rate:** 1 fps/ 3 fps/ 5 fps*/ 7.5 fps*/ 10 fps*/ 12 fps*/ 15 fps*/ 20 fps*/ 30 fps* * The frame rate is limited to “bit rate”. When a value with an asterisk (*) is selected, the actual frame rate may be lower that the value selected. **Bit rate per client:** 64 kbps/ 128 kbps*/ 256 kbps*/ 384 kbps*/ 512 kbps*/ 768 kbps*/ 1024 kbps*/ 1536 kbps*/ 2048 kbps*/ 3072 kbps*/ 4096 kbps*/ 6144 kbps*/ 8192 kbps*/ 10240 kbps*/ 12288 kbps*/ 14336 kbps*/ 16384 kbps*/ 20480 kbps*/ 24576 kbps*/ --FREE ENTRY-- * The available range of the bit rate varies depending on the setting selected for “image capture size”. **Image quality:** • For "Constant bit rate", "Frame rate", and "Best effort": Motion priority/ Normal/ Quality priority • "VBR": 0 Super fine/1 Fine/ 2/ 3/ 4/ 5 Normal/ 6/ 7/ 8/ 9 Low **Transmission type:** Unicast/ Multicast
JPEG (MJPEG)	**Image quality:** 0 SUPER FINE/ 1 FINE/ 2/ 3/ 4/ 5 NORMAL/ 6/ 7/ 8/ 9 LOW (10 steps: 0-9) **Transmission type:** Pull/ Push **Refresh interval:** 0.1fps/ 0.2fps/ 0.33fps/ 0.5fps/ 1fps/ 2fps/ 3fps/ 5fps/ 6fps/ 10fps/ 12fps/ 15fps/ 30fps (JPEG frame rates are limited when using JPEG and H.265/H.264 simultaneously)
Smart coding:	**GOP(Group of pictures) control** On(Frame rate control)*/ On(Advanced)*/ On(Low)/ On(Mid)/ Off *On(Frame rate control) and On(Advanced) are only available with H.265. **AUTO VIQS** On/ Off
Audio compression method:	G.726 (ADPCM) : 16 kbps/ 32 kbps G.711 : 64 kbps AAC-LC *4 : 64 kbps/ 96 kbps/ 128 kbps

Bandwidth control:	Unlimited/ 64 kbps/ 128 kbps/ 256 kbps/ 384 kbps/ 512 kbps/ 768 kbps/ 1024 kbps/ 2048 kbps/ 4096 kbps/ 6144 kbps/ 8192 kbps/ 10240 kbps/ 15360 kbps/ 20480 kbps/ 25600 kbps/ 30720 kbps/ 35840 kbps/ 40960 kbps/ 51200 kbps
Protocol:	IPv6: TCP/IP, UDP/IP, HTTP, HTTPS, FTP, SMTP, DNS, NTP, SNMP, DHCPv6, RTP, MLD, ICMP, ARP, IEEE 802.1X, DiffServ IPv4: TCP/IP, UDP/IP, HTTP, HTTPS, RTSP, RTP, RTP/RTCP, FTP, SMTP, DHCP, DNS, DDNS, NTP, SNMP, UPnP, IGMP, ICMP, ARP, IEEE 802.1X, DiffServ
Security:	User authentication / Host authentication / HTTPS* / Alteration detection of video file* * The certification is pre-installed.
OS *5:	Microsoft Windows 10 Microsoft Windows 8.1 Microsoft Windows 7
Browser *5, *6:	Windows Internet Explorer 11 (32-bit) Microsoft Edge Firefox Google Chrome
Maximum concurrent access number:	14 (Number of sessions that can connect to cameras at the same time) * Depends on network conditions
FTP client:	Alarm image transmission, FTP periodic transmission (When the FTP transmission is failed, backup on an optional SD memory card is available.)
Multi-screen:	Up to 16 camera images can be displayed simultaneously on a multi-screen. (Including the camera itself)
Compatible SDXC/SDHC/SD memory card *7, *8	Manufactured by Panasonic (SD speed class 4 or higher) SDXC memory card : 64 GB, 128 GB, 256 GB SDHC memory card : 4 GB, 8 GB, 16 GB, 32 GB SD memory card : 2 GB (except miniSD memory card and microSD memory card)
Cellular phone compatibility:	JPEG image, AUX control (by access level)
Mobile terminal compatibility: (As of April, 2018) *9	iPad / iPhone (iOS 4.2.1 or later), Android™ mobile terminals

*1 H.265/H.264 can be selected for each stream.
*2 Used by super resolution techniques.
*3 Transmission for 4 streams can be individually set.
*4 When recording audio on an SD memory card, only use AAC-LC (Advanced Audio Coding - Low Complexity).
*5 For further information about PC system requirements and precautions for when using Microsoft Windows or Windows Internet Explorer, click “Manual” - “Open” from the supplied CD-ROM and refer to “Notes on Windows / Internet Explorer versions”.
*6 Refer to our website (https://security.panasonic.com/support/info/<Control No.: C0122>) for latest information about the browser.
*7 Refer to our website (https://security.panasonic.com/support/info/ <Control No.: C0107>) for latest information about the compatible SD memory cards.
*8 When repeatedly recording images on an SD memory card using the auto overwrite function, make sure to use an SD memory card with high reliability and durability.
*9 For further information about compatible devices, refer to our website (https://security.panasonic.com/support/info/ <Control No.: C0108>).

Optional accessories

Ceiling mount bracket	: WV-Q105A *1
Ceiling mount bracket	: WV-Q169A
Sun shade	: WV-Q7118

<Dome covers>

Dome cover (Smoke type)	: WV-CW7S
Dome cover (Smoke type with clear sight coating)	: WV-CW7SN
Dome cover (Clear type with clear sight coating)	: WV-CW7CN

<Light gray brackets>

Wall mount bracket	: WV-Q185 *2
Mount bracket	: WV-Q186 *2
Pole mount bracket	: WV-Q182 *3
Corner mount bracket	: WV-Q183 *3

<Fine silver brackets>

Ceiling mount bracket	: WV-Q121B *4
Wall mount bracket	: WV-Q122A *4
Mount bracket	: WV-Q124 *4
Pole mount bracket	: WV-Q188 *5
Corner mount bracket	: WV-Q189 *5

*1 This product can only be installed indoors when WV-Q105A is used to install it on the ceiling.
*2 WV-Q186 is used with the WV-Q185.
*3 Combine WV-Q185 with WV-Q182/WV-Q183 and mount it onto a pole or corner wall of a building.
*4 WV-Q124 is used with the WV-Q121B or WV-Q122A.
*5 Combine WV-Q122A with WV-Q188/WV-Q189 and mount it onto a pole or corner wall of a building.

Note:

- Each bracket other than Ceiling mount bracket is the same size as another and is provided in two colors of Light gray and Fine silver. The mutual combination of each bracket may be mounted onto.

For U.S. and Canada:

Panasonic Corporation of North America
Two Riverfront Plaza, Newark, NJ 07102-5490
http://business.panasonic.com/

Panasonic Canada Inc.
5770 Ambler Drive, Mississauga, Ontario, L4W 2T3 Canada
1-877-495-0580
https://www.panasonic.com/ca/

For Europe and other countries:

Panasonic Corporation
http://www.panasonic.com

Panasonic Corporation
Osaka, Japan

Authorised Representative in EU:

Panasonic Testing Centre
Panasonic Marketing Europe GmbH
Winsbergring 15, 22525 Hamburg, Germany

© Panasonic Corporation 2018

N0418-2089 PGQP2638XA