Panasonic®

Basic Information

Network Camera

Model No. WV-S2572L
WV-S2552L

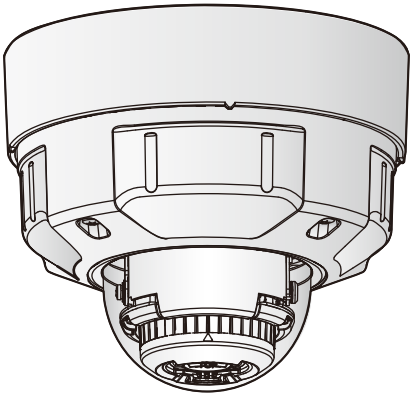

About the user manuals

Product documentation is composed of the following documents.

- **Installation Guide (accessory):** Provides information about “Precautions”, “Precautions for installation” and the installation method.
- **Basic Information (this document):** Provides information about “Precautions for use” and “Detail specifications”.
- **Operating Instructions (in the following website):** Explains how to perform the settings and how to operate this camera.
  https://security.panasonic.com/training_support/documentation_database/

“<Control No.: C****>” used in these documents should be used to search for information on our support website (https://security.panasonic.com/training_support/support/info/) and will guide you to the right information.

- SDXC/ SDHC/ SD memory card is described as SD memory card.
- The external appearance and other parts shown in this manual may differ from the actual product within the scope that will not interfere with normal use due to improvement of the product.

SD XC™

Contents

Limitation of liability 3
Disclaimer of warranty 3
About notations 4
System requirements for a PC 4
Network security 5
Precautions for use 6
Parts and functions 8
Troubleshooting 12
Detail specifications 14

Limitation of liability

THIS PUBLICATION IS PROVIDED “AS IS” WITHOUT WARRANTY OF ANY KIND, EITHER EXPRESS OR IMPLIED, INCLUDING BUT NOT LIMITED TO, THE IMPLIED WARRANTIES OF MERCHANTABILITY, FITNESS FOR ANY PARTICULAR PURPOSE, OR NON-INFRINGEMENT OF THE THIRD PARTY'S RIGHT.
THIS PUBLICATION COULD INCLUDE TECHNICAL INACCURACIES OR TYPOGRAPHICAL ERRORS. CHANGES ARE ADDED TO THE INFORMATION HEREIN, AT ANY TIME, FOR THE IMPROVEMENTS OF THIS PUBLICATION AND/OR THE CORRESPONDING PRODUCT (S).

Disclaimer of warranty

IN NO EVENT SHALL Panasonic i-PRO Sensing Solutions Co., Ltd. BE LIABLE TO ANY PARTY OR ANY PERSON, EXCEPT FOR REPLACEMENT OR REASONABLE MAINTENANCE OF THE PRODUCT, FOR THE CASES, INCLUDING BUT NOT LIMITED TO BELOW:

(1) ANY LOSS OR DAMAGE, INCLUDING WITHOUT LIMITATION, DIRECT OR INDIRECT, SPECIAL, CONSEQUENTIAL OR EXEMPLARY, ARISING OUT OF OR RELATING TO THE PRODUCT;
(2) ANY INCONVENIENCE, LOSS, OR DAMAGE CAUSED BY INAPPROPRIATE USE OR NEGLIGENT OPERATION OF THE USER;
(3) ALL MALFUNCTIONS OR TROUBLES FROM UNAUTHORIZED DISASSEMBLE, REPAIR OR MODIFICATION OF THE PRODUCT BY THE USER, REGARDLESS OF THE CAUSE OF THE MALFUNCTION OR TROUBLE;
(4) INCONVENIENCE OR ANY LOSS ARISING WHEN IMAGES ARE NOT DISPLAYED, DUE TO ANY REASON OR CAUSE INCLUDING ANY FAILURE OR PROBLEM OF THE PRODUCT;
(5) ANY PROBLEM, CONSEQUENTIAL INCONVENIENCE, OR LOSS OR DAMAGE, ARISING OUT OF THE SYSTEM COMBINED BY THE DEVICES OF THIRD PARTY;
(6) ANY CLAIM OR ACTION FOR DAMAGES BROUGHT BY ANY PERSON OR ORGANIZATION AS A PHOTOGRAPHED SUBJECT DUE TO VIOLATION OF PRIVACY CONCERNING A SURVEILLANCE CAMERA'S PICTURE OR SAVED DATA, FOR SOME REASON (INCLUDING USE WHEN USER AUTHENTICATION ON THE AUTHENTICATION SETTING SCREEN IS SET TO OFF), BECOMING PUBLIC OR BEING USED FOR ANY PURPOSE;
(7) LOSS OF REGISTERED DATA CAUSED BY ANY FAILURE (INCLUDING INITIALIZATION OF THE PRODUCT DUE TO FORGOTTEN AUTHENTICATION INFORMATION SUCH AS A USER NAME AND PASSWORD).

About notations

The following notations are used when describing the functions limited for specified models.
The functions without the notations are supported by all models.

S2572 The functions with this notation are available when using the model WV-S2572L.

S2552 The functions with this notation are available when using the model WV-S2552L.

System requirements for a PC

CPU:	Intel® Core™ Processor family *1 - Intel® Core™ i5-6500 or faster - Intel® Core™ i7-6700 or faster recommended
Memory:	4 GB (2 GB x 2, Dual Channel) or more recommended.
Network interface:	10BASE-T/100BASE-TX 1 port
Audio interface:	Sound card (when using the audio function)
Monitor:	Image capture size: 1024 x 768 pixels or more High-resolution monitoring: 3840 x 2160 pixels or more Color: 24-bit True color or better
OS:	Microsoft Windows 10 Microsoft Windows 8.1
Web browser:	Internet Explorer 11 (32-bit) Microsoft Edge Firefox Google Chrome™
Others:	Adobe® Reader® or Acrobat Reader® (It is necessary to view the PDF file.)

*1 In order to view camera images with Internet Explorer, we recommend using the hardware decode function. For details, refer to our support website <Control No.: C0313>.

IMPORTANT:

- For information on the operation verification of the supported operating systems and web browsers, refer to our support website <Control No.: C0104, C0122>.
- When using a PC that does not meet the above requirements, displaying of images may become slower or the web browser may become inoperable.
- Audio may not be heard if a sound card is not installed on a PC. Audio may be interrupted depending on the network environment.
- When using Microsoft Windows 8.1, use it in the desktop. The software cannot be used in the Modern UI design.

Network security

As you will use this unit connected to a network, your attention is called to the following security risks.

① Leakage or theft of information through this unit
② Use of this unit for illegal operations by persons with malicious intent
③ Interference with or stoppage of this unit by persons with malicious intent

It is your responsibility to take precautions such as those described below to protect yourself against the above network security risks.

- Use this unit in a network secured by a firewall, etc.
- If this unit is connected to a network that includes PCs, make sure that the system is not infected by computer viruses or other malicious entities (using a regularly updated anti-virus program, anti-spyware program, etc.).
- To prevent unauthorized access, use user-authentication, set user names and passwords, and limit which users can log in.
- Apply measures such as user authentication to protect your network against leakage or theft of information, including image data, authentication information (user names and passwords), alarm mail information and DDNS server information.
- After the unit is accessed by the administrator, make sure to close the browser.
- Change the administrator password periodically. Additionally, save user authentication information (user names and passwords) in such a way that it is kept out of the hands of third parties.
- Do not install the camera in locations where the camera or the cables can be destroyed or damaged by persons with malicious intent.

Precautions for use

When the product is accessible from the Internet

To prevent unauthorized access, note the following.

- Leave user authentication turned on.
- Periodically change passwords that are used to access the product.
  Refer to the Operating Instructions for information about how to change passwords.

To keep on using with stable performance

Do not use this product in hot and humid conditions for a long time. Failure to observe this causes component degradation resulting in life shortening of this product. Do not expose this product to direct heat sources such as a heater.

Usage such as switching the power ON/OFF frequently could lead to failure of the camera.

Handle this product with care.

Do not drop this product, nor apply shock or vibration to the product. Failure to observe this may cause trouble.

Do not subject dome cover to strong impact.

Doing so may cause damage or immersion.

Do not directly touch the dome cover and lens with your bare hands.

A dirty lens or dome cover causes deterioration of picture quality.

When an error is detected, this product will restart automatically.

This product will be inoperable for around 2 minutes after the restart just as when the power is turned on.

About the automatic status detection function

When this product malfunctions due to exogenous noise, etc. for 30 seconds or more, the product will automatically restart and will return to normal state. When the product is restart, initialization will be carried out as when the power of the product is turned on. When the product repeatedly resets, exogenous noise level around the product may be high and that may cause malfunction. Contact your dealer for instructions.

Periodically images on the screen appear to be distorted

When the camera is installed in a location where it is subject to small vibrations (for example, when it is installed near devices that vibrate), images may appear distorted and stretched lengthways. This phenomenon is a characteristic of image pickup devices that use CMOS sensors and is caused by the relationship between the periodic movements of the camera and the timing that the image sensor reads images. This is not a problem with the camera. To reduce the possibility of this phenomenon occurring, install the camera in a secure location.

About the ventilation opening

There is a ventilation opening inside the enclosure. Do not caulk (fill the clearance between the enclosure and the ceiling or wall with sealants or other materials) as internal humidity is discharged through this ventilation opening. Water does not come inside.

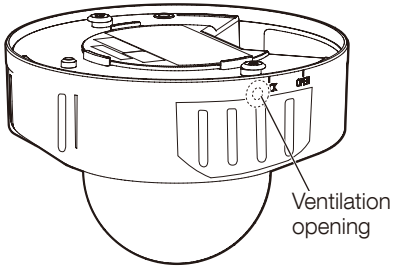

What to do if “WARMING UP-PLEASE WAIT” appears on the display.

This message indicates that the temperature inside the camera has become extremely low.

The camera will be automatically restarted when the inside the camera is warmed up by the built-in heater. Please wait for a while.

We shall not be liable for content compensation, losses of recorded or edited content and any direct or indirect consequent damages caused by failure to record or edit due to faults with this unit or the SD memory card. In addition, the same provisions apply after unit is reparied.

About the CMOS image sensor

- When continuously shooting a bright light source such as a spotlight, the color filter of the CMOS image sensor may become deteriorated and this may cause discoloration. Even when changing the fixed shooting direction after continuously shooting a spotlight for a certain period, the discoloration may remain.
- When shooting fast-moving subjects or objects crossing the shooting area may look to be bending askew.

Cleaning this product body

Be sure to turn off the power before cleaning. Failure to observe this may cause injury.
Do not use benzine, thinner, alcohol, or any other types of solvents or detergents. Otherwise, it may cause discoloration. When using a chemical cloth for cleaning, read the caution provided with the chemical cloth product.

- Do not loozen or remove screws unless instructed to do so in the product documentation.

Cleaning the lens

Use a lens cleaning paper (used to clean camera lenses or lenses of spectacles). When using solvent, use an alcohols solvent and do not use a glass cleaner or a thinner.

Cleaning of the dome cover

Use lens cleaning paper (used to clean camera or spectacles lenses) to remove any dirt on the dome cover. (If dust or the like is adhered at this time, the dome cover may get scratched. We recommend rinsing for stubborn stains.) The mark of light-shielding parts left inside the dome or dirt on the dorm cover may influence the reflection of infrared rays. Therefore, likewise remove those marks and dirt using cleaning paper.

AVC Patent Portfolio License

THIS PRODUCT IS LICENSED UNDER THE AVC PATENT PORTFOLIO LICENSE FOR THE PERSONAL USE OF A CONSUMER OR OTHER USES IN WHICH IT DOES NOT RECEIVE REMUNERATION TO (i) ENCODE VIDEO IN COMPLIANCE WITH THE AVC STANDARD (“AVC VIDEO”) AND/OR (ii) DECODE AVC VIDEO THAT WAS ENCODED BY A CONSUMER ENGAGED IN A PERSONAL ACTIVITY AND/OR WAS OBTAINED FROM A VIDEO PROVIDER LICENSED TO PROVIDE AVC VIDEO. NO LICENSE IS GRANTED OR SHALL BE IMPLIED FOR ANY OTHER USE. ADDITIONAL INFORMATION MAY BE OBTAINED FROM MPEG LA, L.L.C.
SEE HTTP://WWW.MPEGLA.COM

Product disposal/transfer

Data saved on this product or a storage device used with this product may lead to personal information leakage. When it is necessary to dispose or give this product to someone, even when for repair, make sure that there is no data on this product.
When abandoning the memory media, it is recommended to destroy it physically after deleting data by PC.

Effects on images and image quality

Under the following conditions, image quality may deteriorate or images may become difficult to see.

- When there are raindrops on the dome cover due to wind during rainfall.
- When there is snow on the dome cover due to wind during snowfall. (varies depending on the amount and quality of snowfall).
- When the dome cover is dirty due to dust in the air or vehicle exhaust.

Router

When connecting this product to the Internet, use a broadband router with the port forwarding function (NAT, IP masquerade).
Refer to the Operating Instructions for further information about the port forwarding function.

Time & date setting

It is necessary to set the time & date before putting this product into operation. Refer to the Operating Instructions for descriptions of how to perform the settings.

■ Cables

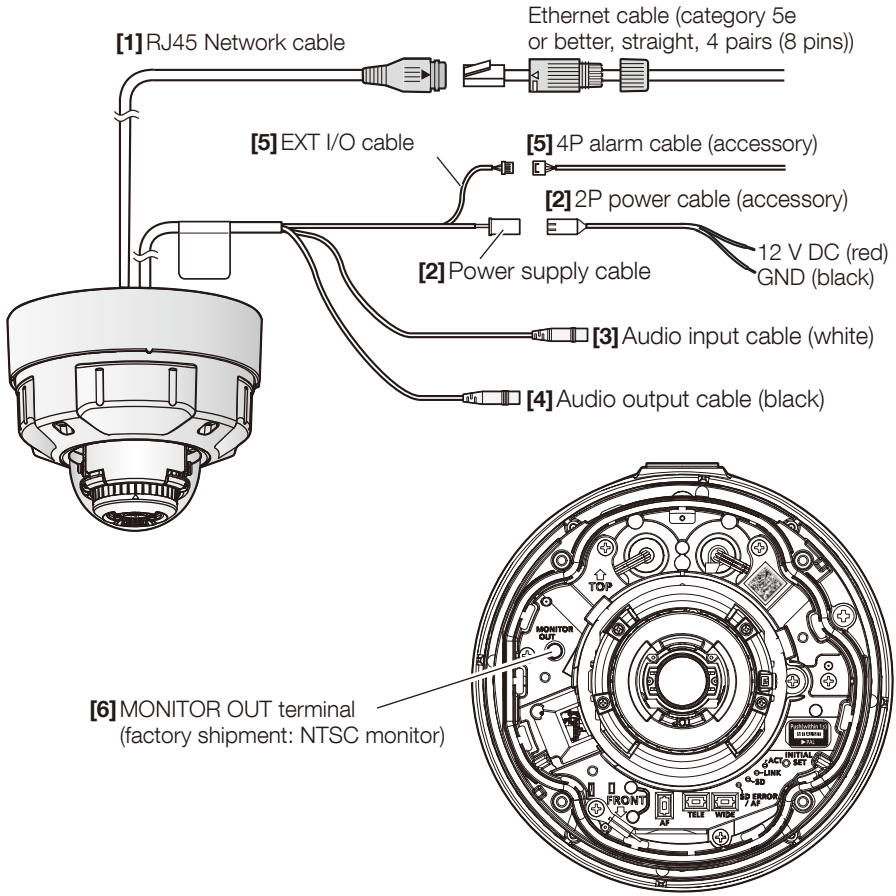

[1] RJ45 Network cable

Connect an Ethernet cable (category 5e or better, straight, 4 pairs (8 pins)) to the network connector.

IMPORTANT:

- Use all 4 pairs (8 pins) of the Ethernet cable.
- The maximum cable length is 100 m {328 feet}.
- Make sure that the PoE device in use is compliant with IEEE802.3af standard.
- When connecting both the 12 V DC power supply and the PoE device for power supply, 12 V DC will be used for power supply.
- When the Ethernet cable is disconnected once, reconnect the cable after around 2 seconds. When the cable is quickly reconnected, the power may not be supplied from the PoE device.

[2] Power supply cable / 2P power cable (accessory)

Connect the output cable of the DC power supply to the 2P power cable.

IMPORTANT:

- Be sure to use the 2P power cable provided with this product.
- Be sure to fully insert the 2P power cable into the power supply cable. Otherwise, it may damage the camera or cause malfunction.
- When installing the camera, make sure that excessive force is not applied to the power cable.
- Be sure to use an AC adaptor compliant with the Specifications (written in the indication label on the bottom side of this unit) regarding power source and power consumption.

[3] Audio input cable (white)

Connect a microphone or the line out of an external device using a stereo mini plug (ø3.5 mm).

<For microphone input>

- Recommended microphone (locally procured): Plug-in power type
  (Sensitivity of microphone: –48 dB ±3 dB (0 dB=1 V/Pa,1 kHz))
- Input impedance: Approx. 2 kΩ (unbalanced)
- Supply voltage: 2.5 V ±0.5 V
- Recommended cable length: Less than 1 m {3.28 feet}

<For line input>

- Input level for the line input: Approx. –10 dBV
- Recommended cable length: Less than 10 m {32.8 feet}

[4] Audio output cable (black)

Connect an external speaker* using a stereo mini plug (ø3.5 mm). (Audio output is monaural.)

- Output impedance: Approx. 600 Ω (unbalanced)
- Recommended cable length: Less than 10 m {32.8 feet}
- Output level: –20 dBV

*Use a powered speaker.

IMPORTANT:

- Connect/disconnect the audio cables and turn on the power of the camera after turning off the power of the audio output devices. Otherwise, loud noise may be heard from the speaker.
- Make sure that the stereo mini plug is connected to this cable. When a monaural mini plug is connected, audio may not be heard.
  When connecting a monaural speaker with amplifier, use a locally procured conversion cable (mono-stereo).

[5] EXT I/O cable / 4P alarm cable (accessory)

Note:

- Off, input, and output of the ALARM IN2 and 3 can be switched by configuring the setting. Refer to the Operating Instructions for further information about the ALARM IN2 and 3 settings (“Off”, “Alarm input”, “Alarm output” or “AUX output”).

<Ratings>

- Alarm input1 / Black & white input / Auto time adjustment input, Alarm input2, Alarm input3
  Input specification: No-voltage make contact input (4 V - 5 V DC, internally pulled up)
  OFF: Open or 4 V - 5 V DC
  ON: Make contact with GND (required drive current: 1 mA or more)
- Alarm output, AUX output
  Output specification: Open collector output (maximum applied voltage: 20 V DC)
  OPEN: 4 V - 5 V DC by internal pull-up
  CLOSE: Output voltage 1 V DC or less (maximum drive current: 50 mA)

4P alarm cable

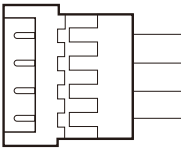

IMPORTANT:

- Install external devices so that they do not exceed the rating of the network camera.
- When using the ALARM IN2 and/or 3 as the output terminals, ensure they do not cause signal collision with external signals.

[6] MONITOR OUT terminal (factory shipment: NTSC monitor)

Used to connect a monitor used for adjustments during installation or when performing service.

IMPORTANT:

- The adjustment monitor is used for checking the adjustment of the angular field of view when installing the camera or when servicing. It is not provided for recording/monitoring use.
- Depending on the monitor, some characters (date, time, camera title, etc.) may not be displayed on the screen.

Note:

- The monitor out is set to NTSC in the default settings of the camera. If you want to change the monitor out setting to PAL, refer to the Operating Instructions on the our support website.

Troubleshooting

Before asking for repairs, check the symptoms with the following table.
Contact your dealer if a problem cannot be solved even after checking and trying the solution in the table or a problem is not described below.

Symptom	Cause/solution	Reference pages
Power is not turned on.	**When using a PoE device for power supply** • Are the PoE device (IEEE802.3af compliant) and the RJ45 Network connector connected using an Ethernet cable? Check whether the connection is appropriately established. • Depending on the PoE device, the power supply will stop when the demanded power exceeds its total power limit for all PoE ports. Refer to the operating instructions of the PoE device in use.	Installation Guide
	When using DC power supply • Is the 2P power cable (accessory) firmly inserted into the power supply cable of the camera? Confirm the power plug is firmly connected. • Is the AC adaptor in use compliant with the Specifications? Check the Specifications regarding AC adaptor.	
The LINK indicator does not light in orange even when the Ethernet cable is connected to the camera.	• Is the Ethernet cable connected appropriately? Connect the Ethernet cable appropriately. • Is the hub or router connected to the camera operating appropriately? Check if the hub or router in use is operating appropriately. • Isn't the Ethernet cable connected to the camera broken? Replace the cable with another one.	Installation Guide
SD ERROR/AF indicator lights red	**This indicator lights up red when data cannot be saved on the SD memory card.** • Isn’t the write protect switch of the inserted SD memory card set to “LOCK”? Unlock the write protect switch of the SD memory card. • Hasn't the inserted SD memory card been formatted on a PC? Use an SD memory card formatted on the camera. Or install the software to format the SD memory card on the PC. Refer to our website <Control No.: C0105> for further information about the supported software. • Isn't the inserted SD memory card faulty? Replace the card with a normal one.	Installation Guide

Symptom	Cause/solution	Reference pages

Audio input contains noise.	• Check the following.
	  • Grounding of the camera, a switching hub or peripheral devices are not done.
	  • The camera is used near an electrical power line.
	  • The camera is used near a device which produces strong magnetic field or radio waves (such as near a TV/radio antenna, a motor of an air conditioning system, a transformer, etc.)
	When audio input still contains noise even after checking the above possibilities, use a powered microphone or connect audio output with low output impedance.
		Installation Guide

Auto focus (AF) can not be able to be automatically adjusted.	• In the following locations or with the following subjects, the focus may not be able to be automatically adjusted. In this case, manually adjust the focus.
	  • When the subject moves a lot
	  • When there are large changes to the lighting intensity
	  • When the light level is low
	  • When the subject or location is extremely bright or reflective
	  • When viewing through windows
	  • When the dome cover is in a locations where it can easily become dirty
	  • Locations where there is not much contrast such as a white wall
	  • When there is harsh flickering
		Operating Instructions

Detail specifications

• Basic

Power source *1:	DC 12 V PoE (IEEE802.3af compliant)
Power consumption *1:	DC 12 V: 980 mA/ Approx. 11.8 W PoE DC 48 V: 260 mA/ Approx. 12.5 W (Class 0 device)
Operating environment Ambient operating temperature: Ambient operating humidity:	 –40 °C to +60 °C*2 {–40 °F to +140 °F} (Power On range: –30 °C to +60 °C {–22 °F to +140 °F}) 10 % to 100 % (no condensation)
Storage environment Storage temperature: Storage humidity:	 –30 °C to +60 °C {–22 °F to +140 °F} 10 % to 95 % (no condensation)
Monitor output (for adjustment):	VBS: 1.0 V [p-p]/75 Ω, composite, ø3.5 mm mini jack An NTSC or PAL signal can be outputted from camera (either press the INITIAL SET switch quickly (within 1 second) or use software to select NTSC or PAL signal).
EXT I/O terminals:	ALARM IN1 (Alarm input 1/ Black & white input/ Auto time adjustment input) (x1) ALARM IN2 (Alarm input 2/ ALARM OUT) (x1) ALARM IN3 (Alarm input 3/ AUX OUT) (x1)
Audio input: For microphone input: For line input:	ø3.5 mm stereo mini jack Recommended applicable microphone: Plug-in power type (Sensitivity of microphone: -48 dB±3 dB (0 dB=1 V/Pa, 1 kHz)) Input impedance: Approx. 2 kΩ (unbalanced) Supply voltage: 2.5 V ±0.5 V Input level: Approx. –10 dBV
Audio output *3:	ø3.5 mm stereo mini jack (Audio output is monaural.) Output impedance: Approx. 600 Ω (unbalanced) Output level: –20 dBV
Waterproof *4:	IP66 (IEC 60529), Type 4X (UL50E) NEMA 4X compliant
Shock resistance:	50 J (IEC 60068-2-75 compliant), IK10 (IEC 62262)
Wind resistance:	Up to 40 m/s {approx. 89 mph}
Dimensions:	**When using base bracket:** ø164 mm × 139 mm (H) {ø6-15/32 inches × 5-15/32 inches (H)} Dome radius 42 mm {1-21/32 inches} **When using attachment plate only:** ø154 mm × 103 mm (H) {ø6-1/16 inches × 4-1/16 inches (H)} Dome radius 42 mm {1-21/32 inches}
Mass:	**When using base bracket:** Approx. 1.6 kg {3.53 lbs.} **When using attachment plate only:** Approx. 1.2 kg {2.65 lbs}
Finish:	Main body: Aluminum die cast, i-PRO white Outer fixing screws: Stainless steel (Corrosion-resistant treatment) Dome cover: Polycarbonate resin, Clear
Others:	Tamper-resistant enclosure*5

*1 Refer to our support website <Control No.: C0106> for further information about Power source and Power consumption information.
*2 When using with the IR LED light constantly lit, the upper limit of the operating temperature range is +50 °C {+122 °F}.
*3 S2572 This camera is not equipped with the function to change the audio output to the monitor output.
S2552 The audio output can be switched to the monitor output. Refer to the “Operating Instructions” on our support website for descriptions of how to switch the output.
*4 Only when installation work is properly performed according to the Installation Guide and appropriate waterproof treatment is performed.
*5 Component that has a structure on which the screws that are accessible after installation cannot be screwed or unscrewed using an ordinary screwdriver.

• Camera

Image sensor:	S2572 Approx. 1/1.8 type CMOS image sensor S2552 Approx. 1/2.8 type CMOS image sensor
Effective pixels:	S2572 Approx. 8.4 megapixels S2552 Approx. 5.1 megapixels
Scanning area:	S2572 7.68 mm (H)×4.32 mm (V) {5/16 inches (H) × 5/32 inches (V)} S2552 5.12 mm (H)×3.84 mm (V) {3/16 inches (H) × 5/32 inches (V)}
Scanning system:	Progressive

Minimum illumination:	S2572 Color: 0.09 lx {0.0084 footcandle} (50IRE, F1.5, Maximum shutter: Off (1/30 s), AGC: 11) 0.006 lx {0.0006 footcandle} (50IRE, F1.5, Maximum shutter: max. 16/30 s, AGC: 11)* BW: 0 lx {0 footcandle} (50IRE, F1.5, Maximum shutter: OFF (1/30 s), AGC: 11, when the IR LED is lit) 0.05 lx {0.0046 footcandle} (50IRE, F1.5, Maximum shutter: Off (1/30 s), AGC: 11) 0.003 lx {0.0003 footcandle} (50IRE, F1.5, Maximum shutter: max. 16/30 s, AGC: 11)* S2552 Color: 0.07 lx {0.0065 footcandle} (50IRE, F1.3, Maximum shutter: Off (1/30 s), AGC: 11) 0.0044 lx {0.0004 footcandle} (50IRE, F1.3, Maximum shutter: max. 16/30 s, AGC: 11)* BW: 0 lx {0 footcandle} (50IRE, F1.3, Maximum shutter: OFF (1/30 s), AGC: 11, when the IR LED is lit) 0.04 lx {0.0037 footcandle} (50IRE, F1.3, Maximum shutter: Off (1/30 s), AGC: 11) 0.003 lx {0.0003 footcandle} (50IRE, F1.3, Maximum shutter: max. 16/30 s, AGC: 11)* * Converted value
Intelligent Auto:	On/ Off
Super Dynamic:	On/ Off The level can be set in the range of 0 to 31.
Dynamic range:	Max. 132 dB (Super Dynamic: On, Level: 31, 15 fps/ 12.5 fps *1)
Maximum gain:	The level can be set in the range of 0 to 11.
Adaptive black stretch:	The level can be set in the range of 0 to 255.
Back light compensation (BLC) / High light compensation (HLC):	BLC/ HLC/ Off The level can be set in the range of 0 to 31. (only when Super Dynamic/ Intelligent auto: Off)
Fog compensation:	On/ Off The level can be set in the range of 0 to 8. (only when Intelligent Auto / auto contrast adjust: Off)
Light control mode setting:	Outdoor scene/ Indoor scene (50 Hz)/ Indoor scene (60 Hz)/ Fix shutter
Shutter speed:	[30 fps mode] 1/30 Fix, 3/120 Fix, 2/100 Fix, 2/120 Fix, 1/100 Fix, 1/120 Fix, 1/250 Fix, 1/500 Fix, 1/1000 Fix, 1/2000 Fix, 1/4000 Fix, 1/10000 Fix [25 fps mode] 1/25 Fix, 3/100 Fix, 2/100 Fix, 1/100 Fix, 1/250 Fix, 1/500 Fix, 1/1000 Fix, 1/2000 Fix, 1/4000 Fix, 1/10000 Fix

Maximum shutter:	[30 fps mode] Max. 1/4000 s, Max. 1/2000 s, Max. 1/1000 s, Max. 1/500 s, Max. 1/250 s, Max. 1/120 s, Max. 1/100 s, Max. 2/120 s, Max. 2/100 s, Max. 3/120 s, Max. 1/30 s, Max. 2/30 s, Max. 4/30 s, Max. 6/30 s, Max. 10/30 s, Max. 16/30 s [25 fps mode] Max. 1/4000 s, Max. 1/2000 s, Max. 1/1000 s, Max. 1/500 s, Max. 1/250 s, Max. 1/100 s, Max. 2/100 s, Max. 3/100 s, Max. 1/25 s, Max. 2/25 s, Max. 4/25 s, Max. 6/25 s, Max. 10/25 s, Max. 16/25 s
Color/BW:	Off/ On(IR Light Off)/ On(IR Light On)/ Auto1(IR Light Off)/ Auto2(IR Light On)/ Auto3(SCC)
IR LED Light:	High/ Middle/ Low/ Off Maximum irradiation distance: 40 m {Approx. 131 ft}
White balance:	ATW1/ ATW2/ AWC
Digital noise reduction:	The level can be set in the range of 0 to 255.
Privacy zone:	On/ Off Up to 8 zones available
Camera title on screen:	On/ Off Up to 20 characters (alphanumeric characters, marks)
Video Motion Detection (VMD):	On/ Off 4 areas available
Scene Change Detection (SCD):	On/ Off 1 area available
Image rotation *2 *3:	0° (Off)/ 90°/ 180° (Upside-down)/ 270°

*1 The frame rate is limited to 15 fps/ 12.5 fps for level 30 or higher.
*2 When the 320x180 resolution is used, the “90°” and “270°” settings are not available.
*3 When “0°(Off)” or “180° (Upside-down)” is used, the analog output of the MONITOR OUT terminal rotates according to the setting angle of the rotated image.

• Lens

Zoom ratio:	S2572 Optical zoom: 2.0x (Motorized zoom / Motorized focus) Extra optical zoom: max 6.0x (2.0x – 6.0x when resolution is 1280x720) S2552 Optical zoom: 3.1x (Motorized zoom / Motorized focus) Extra optical zoom: max 9.3x (3.1x – 9.3x when resolution is 640x360)
Digital (electronic) zoom:	Choose from 3 levels of x1, x2, x4
Focal length:	S2572 4.3 mm – 8.6 mm {5/32 inches – 11/32 inches} S2552 2.9 mm – 9 mm {1/8 inches – 11/32 inches}
Maximum aperture ratio:	S2572 1:1.5 (WIDE) – 1:2.4 (TELE) S2552 1:1.3 (WIDE) – 1:2.5 (TELE)

Focus range:	S2572 1 m {39-3/8 inches} – ∞ S2552 0.3 m {11-13/16 inches} – ∞
Aperture range:	S2572 F1.5 – Close S2552 F1.3 – Close
Angular field of view:	S2572 [16:9 mode*] *[4:3 mode] is not supported. Horizontal: 52° (TELE) – 101° (WIDE) Vertical: 29° (TELE) – 55° (WIDE) S2552 [16:9 mode] Horizontal: 33° (TELE) – 103° (WIDE) Vertical: 19° (TELE) – 55° (WIDE) [4:3 mode] Horizontal: 33° (TELE) – 103° (WIDE) Vertical: 25° (TELE) – 75° (WIDE)
Adjusting angle:	Horizontal (PAN) angle: ±180° Vertical (TILT) angle: -30° to +85° Azimuth (YAW) angle: ±100°

• Network

Network:	10BASE-T/100BASE-TX, RJ45 connector
Resolution *1: H.265/ H.264 JPEG (MJPEG)	S2572 [16:9 mode*] *[4:3 mode] is not supported. 3840×2160/ 2560×1440/ 1920×1080/ 1280×720/ 640×360/ 320×180 S2552 [16:9 mode] 3072×1728 *2/ 2560×1440/ 1920×1080/ 1280×720/ 640×360/ 320×180 [4:3 mode] 3072×2304 *2/ 2560×1920/ 1280×960/ 800×600/ VGA/ 400×300/ QVGA

Image compression method: H.265/ H.264 *3	**Transmission priority:** Constant bit rate/ VBR/ Frame rate/ Best effort **Frame rate:** [30 fps mode] 1 fps/ 3 fps/ 5 fps*/ 7.5 fps*/ 10 fps*/ 12 fps*/ 15 fps*/ 20 fps*/ 30 fps* [25 fps mode] 1 fps/ 3.1 fps/ 4.2 fps*/ 6.25 fps*/ 8.3 fps*/ 12.5 fps*/ 20 fps*/ 25 fps* (The frame rate is limited to “bit rate”. When a value with an asterisk (*) is selected, the actual frame rate may be lower that the value selected.) **Bit rate per client:** 64 kbps/ 128 kbps*/ 256 kbps*/ 384 kbps*/ 512 kbps*/ 768 kbps*/ 1024 kbps*/ 1536 kbps*/ 2048 kbps*/ 3072 kbps*/ 4096 kbps*/ 6144 kbps*/ 8192 kbps*/ 10240 kbps*/ 12288 kbps*/ 14336 kbps*/ 16384 kbps*/ 20480 kbps*/ 24576 kbps*/ --FREE ENTRY-- *The available range of the bit rate varies depending on the setting selected for “image capture size”. **Image quality:** • For “Constant bit rate”, “Frame rate”, and “Best effort”: Low(Motion priority)/ Normal/ Fine(Image quality priority) • “VBR”: 0 Super fine/ 1 Fine/ 2/ 3/ 4/ 5 Normal/ 6/ 7/ 8/ 9 Low **Transmission type:** Unicast port (AUTO)/ Unicast port (MANUAL)/ Multicast
JPEG (MJPEG)	**Image quality:** 0 SUPER FINE/ 1 FINE/ 2/ 3/ 4/ 5 NORMAL/ 6/ 7/ 8/ 9 LOW (10 steps: 0-9) **Transmission type:** Pull (Refresh interval)/ Push (MJPEG) **Refresh interval:** [30 fps mode] 0.1 fps/ 0.2 fps/ 0.33 fps/ 0.5 fps/ 1 fps/ 2 fps/ 3 fps/ 5 fps/ 6 fps/ 10 fps/ 12 fps/ 15 fps/ 30 fps [25 fps mode] 0.08 fps/ 0.17 fps/ 0.28 fps/ 0.42 fps/ 1 fps/ 2.1 fps/ 3.1 fps/ 4.2 fps/ 5 fps/ 8.3 fps/ 12.5 fps/ 25 fps (JPEG frame rates are limited when using JPEG and H.265/H.264 simultaneously.)
Smart coding:	GOP(Group of pictures) control On(Frame rate control) */ On(Advanced) */ On(Mid)/ On(Low)/ Off *On(Frame rate control) and On(Advanced) are only available with H.265. Auto VIQS On/ Off
Audio compression method:	G.726 (ADPCM): 16 kbps/ 32 kbps G.711: 64 kbps AAC-LC *4: 64 kbps/ 96 kbps/ 128 kbps

Bandwidth control:	Unlimited/ 64 kbps/ 128 kbps/ 256 kbps/ 384 kbps/ 512 kbps/ 768 kbps/ 1024 kbps/ 2048 kbps/ 4096 kbps/ 6144 kbps/ 8192 kbps/ 10240 kbps/ 15360 kbps/ 20480 kbps/ 25600 kbps/ 30720 kbps/ 35840 kbps/ 40960 kbps/ 51200 kbps
Protocol:	IPv6: TCP/IP, UDP/IP, HTTP, HTTPS, SMTP, DNS, NTP, SNMP, DHCPv6, RTP, MLD, ICMP, ARP, IEEE 802.1X, DiffServ IPv4: TCP/IP, UDP/IP, HTTP, HTTPS, RTSP, RTP, RTP/RTCP, SMTP, DHCP, DNS, DDNS, NTP, SNMP, UPnP, IGMP, ICMP, ARP, IEEE 802.1X, DiffServ
Security:	User authentication, Host authentication, HTTPS*, Alteration detection of video file* * The certification is pre-installed.
OS *5:	Microsoft Windows 10 Microsoft Windows 8.1
Browser *5:	Internet Explorer 11 (32-bit) Microsoft Edge Firefox Google Chrome
Maximum concurrent access number:	14* (Number of sessions that can connect to cameras at the same time) * Depends on network conditions
Multi-screen:	Up to 16 camera images can be displayed simultaneously on a multi-screen. (Including the camera itself)
Compatible SDXC/SDHC/SD memory card *6, *7, *8 :	Manufactured by Panasonic (SD speed class 6 or higher) SDXC memory card: 64 GB, 128 GB, 256 GB SDHC memory card: 4 GB, 8 GB, 16 GB, 32 GB SD memory card: 2 GB (except miniSD memory card and microSD memory card)
Mobile terminal/ Tablet terminal compatibility:	iPad / iPhone (iOS 8 or later), Android™ terminals

*1 H.265/H.264 can be selected for each stream.
*2 Used by super resolution techniques.
*3 Transmission for 4 streams can be individually set.
*4 When recording audio on an SD memory card, only use AAC-LC (Advanced Audio Coding - Low Complexity).
*5 For information on the operation verification of the supported operating systems and web browsers, refer to our support website <Control No.: C0104, C0122>.
*6 For possible number of images and duration (an indication) that can be saved on the SD memory card, refer to our support website below.
Possible number of JPEG images that can be saved: <Control No.: C0306>
Possible duration of stream images (H.265 or H.264) that can be saved: <Control No.: C0307>
*7 Refer to our support website <Control No.: C0107> for latest information about the compatible SD memory cards.
*8 When repeatedly recording images on an SD memory card using the auto overwrite function, make sure to use an SD memory card with high reliability and durability.

For U.S. and Canada:

Panasonic i-PRO Sensing Solutions Corporation of America
800 Gessner Rd, Suite 700 Houston, TX 77024
https://www.security.us.panasonic.com/

Panasonic Canada Inc.
5770 Ambler Drive, Mississauga, Ontario, L4W 2T3 Canada
1-877-495-0580
https://www.panasonic.com/ca/

For Europe and other countries:

Panasonic Corporation
http://www.panasonic.com

Panasonic i-PRO Sensing Solutions Co., Ltd.
Fukuoka, Japan

Authorised Representative in EU:

Panasonic Testing Centre
Panasonic Marketing Europe GmbH
Winsbergring 15, 22525 Hamburg, Germany

© Panasonic i-PRO Sensing Solutions Co., Ltd. 2020

av1020-0 PGQP3072ZA